Self Diagnosis Supported model

SERVICE MANUAL

AE-6B CHASSIS

MODEL	COMMANDER	DEST	CHASSIS NO.
KV-32LS65AUS	RM-934	AUS	SCC-Q86A-A

FD Trinitron

KV-32LS65AUS

RM-934

TRINITRON ® COLOR TV

SONY®

TABLE OF CONTENTS

Section	Title	Page
	Caution	3
	Specifications	4
	Connectors	5
	Self Diagnostic Software	6
1. GENERAL		
	Switching On the TV and Automatically Tuning	7
	Introducing the Menu System	8
	Menu Guide	8
	Teletext	10
	Remote Control Configuration for VCR/DVD	10
	Specifications	11
	Troubleshooting	11
2. DISASSEMBLY		
2-1.	Rear Cover Removal	12
2-2.	Speaker Disconnection	12
2-3.	Chassis Removal	12
2-4.	Service Position	13
2-5.	D and G Board Removal	13
2-6.	Side Control Module Removal	13
2-7.	H2 Board Removal	13
2-8.	M Board Removal	14
2-9.	Service Connector for M Board	14
2-10.	Wire Dressing	14
2-11.	Picture Tube Removal	15
	Bottom Plates	16
3. SET-UP ADJUSTMENTS		
3-1.	Beam Landing	17
3-2.	Convergence	18
3-3.	Focus Adjustment	20
3-4.	Screen (G2), White Balance	20
4. CIRCUIT ADJUSTMENTS		
4-1.	Electrical Adjustments	21
4-2.	Test Mode 2	23

Section	Title	Page
5. DIAGRAMS		
5-1.	Block Diagrams (1)	25
	Block Diagrams (2)	26
	Block Diagrams (3)	27
	Block Diagrams (4)	28
5-2.	Circuit Board Location	28
5-3.	Schematic Diagrams and Printed Wiring Boards	28
	* A Board Schematic	29
	* A Board PWB	31
	* VM Board Schematic	35
	* VM Board PWB	33
	* F2 Board Schematic	35
	* F2 Board PWB	36
	* H2 Board Schematic	35
	* H2 Board PWB	36
	* G Board Schematic	37
	* G Board PWB	36
	* C Board Schematic	38
	* C Board PWB	39
	* M Board Schematic	40
	* M Board PWB	39
	* D Board Schematic	42
	* D Board PWB	41
5-4.	Semiconductors	43
5-5.	IC Blocks	46
6. EXPLODED VIEWS		
6-1.	Chassis	48
6-2.	Picture Tube	49
7. ELECTRICAL PARTS LIST		50

CAUTION

SHORT CIRCUIT THE ANODE OF THE PICTURE TUBE AND THE ANODE CAP TO THE METAL CHASSIS, CRT SHIELD, OR THE CARBON PAINTED ON THE CRT, AFTER REMOVAL OF THE ANODE CAP.

WARNING !!

AN ISOLATION TRANSFORMER SHOULD BE USED DURING ANY SERVICE WORK TO AVOID POSSIBLE SHOCK HAZARD DUE TO LIVE CHASSIS, THE CHASSIS OF THIS RECEIVER IS DIRECTLY CONNECTED TO THE POWER LINE.

SAFETY-RELATED COMPONENT WARNING !!

COMPONENTS IDENTIFIED BY SHADING AND MARKED ⚠ ON THE SCHEMATIC DIAGRAMS, EXPLODED VIEWS AND IN THE PARTS LIST ARE CRITICAL FOR SAFE OPERATION. REPLACE THESE COMPONENTS WITH SONY PARTS WHOSE PART NUMBERS APPEAR AS SHOWN IN THIS MANUAL OR IN SUPPLEMENTS PUBLISHED BY SONY.

ATTENTION

APRES AVOIR DECONNECTE LE CAP DE'LANODE, COURT-CIRCUITER L'ANODE DU TUBE CATHODIQUE ET CELUI DE L'ANODE DU CAP AU CHASSIS METALLIQUE DE L'APPAREIL, OU AU COUCHE DE CARBONE PEINTE SUR LE TUBE CATHODIQUE OU AU BLINDAGE DU TUBE CATHODIQUE.

ATTENTION !!

AFIN D'EVITER TOUT RISQUE D'ELECTROCUTION PROVENANT D'UN CHÁSSIS SOUS TENTION, UN TRANSFORMATEUR D'ISOLEMENT DOIT ETRE UTILISÈ LORS DE TOUT DÈPANNAGE LE CHÁSSIS DE CE RÈCEPTEUR EST DIRECTMENT RACCORDÈ Á L'ALIMENTATION SECTEUR.

ATTENTION AUX COMPOSANTS RELATIFS Á LA SECURITÈ!!

LES COMPOSANTS IDENTIFIÈS PAR UNE TRAME ET PAR UNE MARQUE ⚠ SUR LES SCHÈMAS DE PRINCIPE, LES VUES EXPLOSÈES ET LES LISTES DE PIECES SONT D'UNE IMPORTANCE CRITIQUE POUR LA SÈCURITÈ DU FONCTIONNEMENT, NE LES REMPLACER QUE PAR DES COMPSANTS SONY DONT LE NUMÈRO DE PIÈCE EST INDIQUÈ DANS LE PRÈSENT MANUEL OU DANS DES SUPPLÈMENTS PUBLIÈS PAR SONY.

CAUTION

Lead Free Soldered Boards

The circuit boards listed below [Table 1] used in these models may have been processed using Lead Free Solder. The boards are identified by the LF logo located close to the board designation e.g. F1, H1 etc [see examples]. The servicing of these boards requires special precautions to be taken as outlined below.

example 1

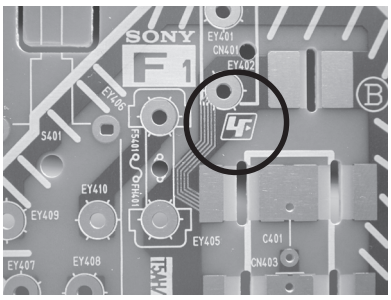

example 2

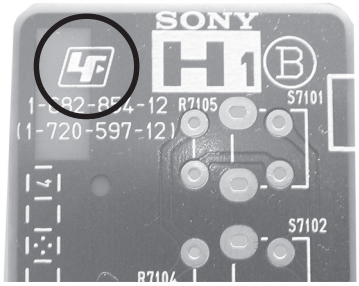

Table 1

Board	Function
C	R,G,B Out
F2	Power Switch/Fuse
H2	Front AV/ Headphone

It is strongly recommended to use Lead Free Solder material in order to guarantee optimal quality of new solder joints. Lead Free Solder is available under the following part numbers :

Partnumber	Diameter	Remarks
7-640-005-19	0.3mm	0.25Kg
7-640-005-20	0.4mm	0.50Kg
7-640-005-21	0.5mm	0.50Kg
7-640-005-22	0.6mm	0.25Kg
7-640-005-23	0.8mm	1.00Kg
7-640-005-24	1.0mm	1.00Kg
7-640-005-25	1.2mm	1.00Kg
7-640-005-26	1.6mm	1.00Kg

Due to the higher melting point of Lead Free Solder the soldering iron tip temperature needs to be set to 370 degrees centigrade. This requires soldering equipment capable of accurate temperature control coupled with a good heat recovery characteristics.

For more information on the use of Lead Free Solder, please refer to *http://www.sony-training.com*

ITEM MODEL	Television System	Stereo System	Channel Coverage	Color System
AUS	B	GERMAN Stereo	VHF : C00-C12, C05A, C09A UHF : C20-C69 CABLE : S02-S44	PAL, NTSC4.43, NTSC3.58 (VIDEO IN)

Picture Tube	Flat Display FD Trinitron Approx 82 cm (32 inches) (Approx 76 cm picture measured diagonally)	**Sound output**	
		Right and Left speaker	2x20W (Music Power) 2x10W (RMS)
Input/Output Terminals [REAR]		**General Specifications**	
1: 21-pin Euro connector (CENELEC standard)	Inputs for Audio and Video signals. Inputs for RGB. Outputs of TV Video and Audio signals.	Power Requirements	220 - 240V
		Power Consumption	130 W
2: 21-pin Euro connector	Inputs for Audio and Video signals. Inputs for RGB. Outputs of TV Video and Audio signals. (Monitor Out)	Dimensions	Approx 892x565x584mm
		Weight	Approx 62.2kg
3: 21-pin Euro connector	Inputs for Audio and Video signals. Inputs for S Video. Outputs of TV Video and Audio signals. (selectable)	Supplied Accessories	RM-934 Remote Commander (1) IEC designated R6 battery (2) Scart Adaptor (1) Scart Cables (2)
Phono Jacks	Output Connectors variable for Audio Signals	Other Features	100 Hz picture, Digital Plus, Teletext, Fastext, TOPtext (250 page TEXT memory), Sleep Timer, BBE, Virtual Dolby, PIP, Auto Format
Input/Output Terminals [SIDE]		**Remote Control System : Infrared Control**	
Headphone jack	stereo mini jack	Power requirements	3V dc 2 batteries IEC designation R6 (size AA)
Audio inputs	phono jacks		
Video inputs	phono jacks		
S Video input	4 pin DIN		
Design and specifications are subject to change without notice.			

Model Name Item	KV-32LS65AUS
Pal Comb	OFF
PIP	OFF
RGB Priority	ON
Woofer Box	ON
Scart 1	ON
Scart 2	ON
Front in (3)	ON
Scart 4	OFF
Projector	OFF
Norm B/G	ON
Norm I	OFF
Norm D/K	OFF
Norm AUS	ON
Norm L	OFF
Norm SAT	OFF
Norm M	OFF
Teletext	ON
Nicam Stereo	ON

21 pin connector

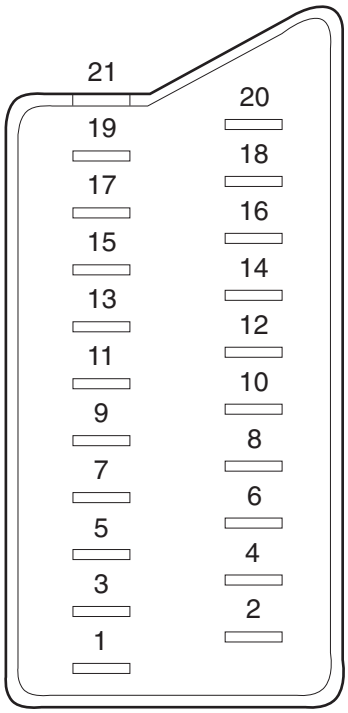

Pin No	1	2	3	Signal	Signal level
1	○	○	○	Audio output B (right)	Standard level : 0.5V rms Output impedence : Less than 1kohm*
2	○	○	○	Audio input B (right)	Standard level : 0.5V rms Output impedence : More than 10kohm*
3	○	○	○	Audio output A (left)	Standard level : 0.5V rms Output impedence : Less than 1kohm*
4	○	○	○	Ground (audio)	
5	○	○	○	Ground (blue)	
6	○	○	○	Audio input A (left)	Standard level : 0.5V rms Output impedence : More than 10kohm*
7	○	●	●	Blue input	0.7 +/- 3dB, 75 ohms positive
8	○	○	○	Function select (AV control)	High state (9.5-12V) : Part mode Low state (0-2V) : TV mode Input impedence : More than 10K ohms Input capacitance : Less than 2nF
9	○	○	○	Ground (green)	
10	○	○	○	Open	
11	○	●	●	Green	Green signal : 0.7 +/- 3dB, 75 ohms, positive
12	○	○	○	Open	
13	○	○	○	Ground (red)	
14	○	○	○	Ground (blanking)	
15	○	–	–	Red input	0.7 +/- 3dB, 75 ohms, positive
	–	○	○	(S signal Chroma input)	0.3 +/- 3dB, 75 ohms, positive
16	○	●	●	Blanking input (Ys signal)	High state (1-3V) Low state (0-0.4V) Input impedence : 75 ohms
17	○	○	○	Ground (video output)	
18	○	○	○	Ground (video input)	
19	○	○	○	Video output	1V +/- 3dB, 75ohms, positive sync 0.3V (-3+10dB)
20	○	–	–	Video input	1V +/- 3dB, 75ohms, positive sync 0.3V (-3+10dB)
	–	○	○	Video input Y (S signal)	1V +/- 3dB, 75ohms, positive sync 0.3V (-3+10dB)
21	○	○	○	Common ground (plug, shield)	

○ Connected ● Not Connected (open) * at 20Hz - 20kHz

Rear Connection Panel

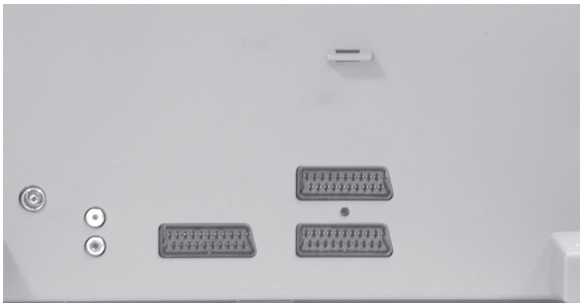

Side Connection Panel

S-Video socket

S Video socket pin configuration		
Pin No	**Signal**	**Signal Level**
1	Ground	-
2	Ground	-
3	Y (S signal) input	1V+/- 3dB 75ohm, positive Sync. 0.3V -3 +10dB
4	C (S signal) input	0.3V+/- 3dB 75ohm, positive Sync.

AE-6B SELF DIAGNOSTIC SOFTWARE

The identification of errors within the AE-6B chassis is triggered in one of two ways :- 1: Busy or 2: Device failure to respond to IIC. In the event of one of these situations arising the software will first try to release the bus if busy (Failure to do so will report with a continuous flashing LED) and then communicate with each device in turn to establish if a device is faulty. If a device is found to be faulty the relevant device number will be displayed through the LED (Series of flashes which must be counted) See table 1, non fatal errors are reported using this method.
Each time the software detects an error it is stored within the NVM. See Table 2.

Table 1

Error Message	LED Code
No error	00
Reserved	01
OCP (Over Current Protection)	02
Over Voltage Protection	03
No Vertical Sync	04
IKR Error at power on	05
IIC bus clock and/or data lines low at power on	06
NVM no IIC bus acknowledge at power on	07
Horizontal Protection	08
Tuner no acknowledge at power on	09
Sound Processor Error	10
Reserved	11
Scanrate Error	12
DAC Error	13
Backend Error	14
Dynamic Convergence Error	15
PIP Error	16

Flash Timing Example : e.g. error number 3

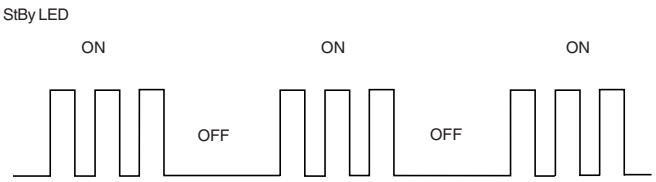

How to enter into Table 2

1. Turn on the main power switch of the TV set.
2. Program Remote Commander for Operation in Service Mode. [See Page 21].
3. Press 'VIDEO' 'VIDEO' > 'MENU' on the Remote Commander.
4. Using the Remote Commander, Scroll to the 'Error Menu' item using the down arrow key, then press the right arrow key.
5. The following table will be displayed indicating the error count.

Table 2

ERROR MENU			
E02	OCP	(0, 255)	0
E03	OVP	(0, 255)	0
E04	VSYNC	(0, 255)	0
E05	IKR	(0, 255)	0
E06	IIC	(0, 255)	0
E07	NVM	(0, 255)	0
E08	HPROT	(0, 255)	0
E09	TUNER	(0, 255)	0
E10	SOUNDP	(0, 255)	0
E11	-	(0, 255)	0
E12	SCANRATE	(0, 255)	0
E13	DAC	(0, 255)	0
E14	BACKEND	(0, 255)	0
E15	DYN CON	(0, 255)	0
E16	PIP	(0, 255)	0
WORKING TIME			
HOURS			14
MINUTES			7

Note: To clear the error count data press '80' on the Remote commander.

The operating instructions mentioned here are partial abstracts from the 'Operating Instruction Manual'. The page numbers of the 'Operating Instruction Manual' remain as in the manual.

Switching On the TV and Automatically Tuning

The first time you switch on your TV, a sequence of menu screens appear on the TV enabling you to: 1) adjust the picture slant, 2) search and store all available channels (TV Broadcast) and 3) change the order in which the channels (TV Broadcast) appear on the screen.
However, if you need to change any of these settings at a later date, you can do that by selecting the appropriate option in the (Set Up menu) or by pressing the Auto Start Up Button on the TV set.

1 Connect the TV plug to the mains socket (220-240V AC, 50Hz)

Do not connect the power cord until you have completed making all other connections; otherwise a minimum leakage current might flow through the aerial and other terminals to ground.

The first time that the TV set is connected, it is usually turned on. If the TV is off, press the on/off button on the TV set to turn on the TV.
The first time you switch on the **TV**, a menu screen displays automatically on the TV.

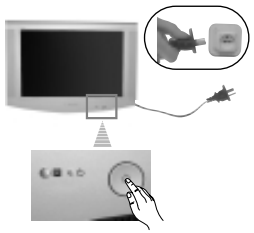

2 Because of the earth's magnetism, the picture might slant. The **Picture Rotation** menu allows you to correct the picture slant if it is necessary.

a) If it is not necessary, press or to select **Not necessary** and press **OK**.

b) If it is necessary, press or to select **Adjust now**, then press **OK** and correct any slant of the picture between –5 and +5 by pressing or . Finally press **OK** to store.

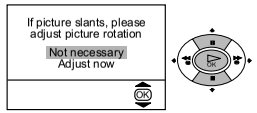

3 The Auto Tuning menu appears on the screen. Press the **OK** button to select **Yes**.

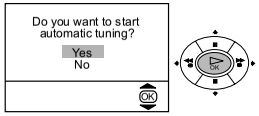

continued...

EN

4 The TV starts to automatically search and store all available broadcast channels for you.

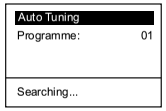

This procedure could take some minutes. Please be patient and do not press any buttons, otherwise the automatic tuning will not be completed.

If no channels were found during the auto tuning process then a new menu appears automatically on the screen asking you to connect the aerial. Please connect the aerial (see page 6) and press **OK**. The auto tuning process will start again.

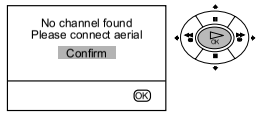

5 After all available channels are captured and stored, the **Programme Sorting** menu appears automatically on the screen enabling you to change the order in which the channels appear on the screen.

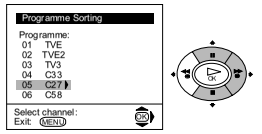

a) If you wish to keep the broadcast channels in the tuned order, go to step 6.

b) If you wish to store the channels in a different order:

1 Press the or button to select the programme number with the channel (TV Broadcast) you wish to rearrange, then press the button.

2 Press the or button to select the new programme number position for your selected channel (TV Broadcast), then press .

3 Repeat steps b)1 and b)2 if you wish to change the order of the other channels.

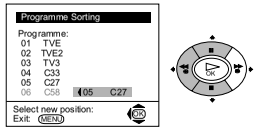

6 Press the **MENU** button to remove the menu from the screen.

Your TV is now ready for use

Introducing and Using the Menu System

Your TV uses an on-screen menu system to guide you through the operations. Use the following buttons on the Remote Control to operate the menu system:

1 Press the **MENU** button to switch the first level menu on.

2 • To highlight the desired menu or option, press ▼ or ▲.
- To enter to the selected menu or option, press ▶.
- To return to the last menu or option, press ◀.
- To alter settings of your selected option, press ▼ / ▲ / ◀ or ▶.
- To confirm and store your selection, press **OK**.

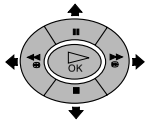

3 Press the **MENU** button to remove the menu from the screen.

EN

Menu Guide

Level 1 **Level 2** **Level 3 / Function**

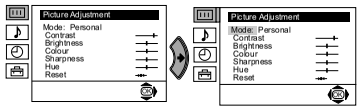

PICTURE ADJUSTMENT
The "Picture Adjustment" menu allows you to alter the picture adjustments.

To do this: after selecting the item you want to alter press ▶, then press repeatedly ▼ / ▲ / ◀ or ▶ to adjust it and finally press **OK** to store the new adjustment.
This menu also allows you to customise the picture mode based on the programme you are watching:
- ▼ **Live** (for live broadcast programmes, DVD and Digital Set Top Box receivers).
- ▼ **Personal** (for individual settings).
- ▼ **Movie** (for films).

- ***Brightness, Colour*** *and* ***Sharpness*** *can only be altered if "Personal" mode is selected.*
- ***Hue*** *is only available for NTSC colour signal (e.g: USA video tapes).*
- *Select* ***Reset*** *and press* ***OK*** *to reset the picture to the factory preset levels.*

Level 1 **Level 2** **Level 3 / Function**

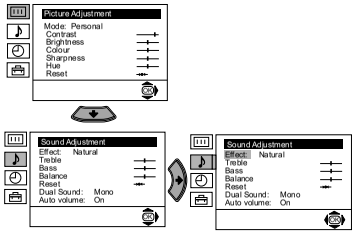

SOUND ADJUSTMENT
The "Sound Adjustment" menu allows you to alter the sound adjustments.

To do this: after selecting the item you want to alter, press ▶. Then press repeatedly ▼ / ▲ / ◀ or ▶ to adjust it and finally press **OK** to store the new adjustment.

Effect ▶
- ▼ **Natural:** Enhances clarity, detail and presence of sound by using "BBE High Definition Sound system"*.
- ▼ **Dynamic:** "BBE High Definition Sound system"* intensifies clarity and presence of sound for better intelligibility and musical realism.
- ▼ **Dolby******Virtual:** Simulates the sound effect of "Dolby Surround Pro Logic".
- ▼ **Off:** Flat response.

Treble ▶ ◀ Less ▶ More

Bass ▶ ◀ Less ▶ More

Balance ▶ ◀ Left ▶ Right

Reset (OK) Resets the sound to the factory preset levels.

Dual Sound ▶
- *For a stereo broadcast:*
  - ▼ **Mono**.
  - ▼ **Stereo**.
- *For a bilingual broadcast:*
  - ▼ **Mono** (for mono channel if available).
  - ▼ **A** (for channel 1).
  - ▼ **B** (for channel 2).

Auto Volume ▶
- ▼ **Off:** volume level changes according to the broadcast signal.
- ▼ **On:** volume level of the channels will stay the same, independent of the broadcast signal (e.g. in the case of advertisements).

- *If you are listening to the TV through headphones, the "Effect" option will automatically be switched to "Off".*
- *If you select "Dolby Virtual" on the "Effect" option, the "Auto Volume" option will automatically be switched to "Off" and vice versa.*

* *The "BBE High Definition Sound system" is manufactured by Sony Corporation under license from BBE Sound, Inc. It is covered by U.S. Patent No. 4,638,258 and No. 4,482,866. The word "BBE" and BBE Symbol are trademarks of BBE Sound, Inc.*

** *This TV has been designed to create the "Dolby Surround" sound effect by simulating the sound of four speakers with two speakers, when the broadcast audio signal is Dolby Surround encoded. The sound effect can also be improved by connecting a suitable external amplifier (for details refer to "Connecting to external audio Equipment" on page 19).*

** *Manufactured under license from Dolby Laboratories. "Dolby", "Pro Logic" and the double-D symbol ◻◻ are trademarks of Dolby Laboratories.*

continued...

Level 1	Level 2	Level 3 / Function

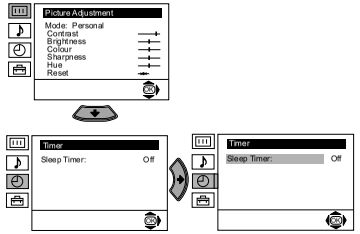

SLEEP TIMER

The "Sleep Timer" option in the "Timer" menu allows you to select a time period for the TV to switch itself automatically into the standby mode.

To do this: after selecting the option press ➔, then press ⬇ or ⬆ to set the time period delay (max. of 4 hours).

- *While watching the TV, you can press the (i+) button on the remote control to display the time remaining.*
- *One minute before the TV switches itself into standby mode, the time remaining is displayed on the TV screen automatically.*

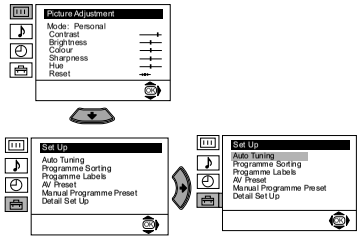

AUTO TUNING

The "Auto Tuning" option in the "Set Up" menu allows you to automatically search for and store all available TV channels.

To do this: after selecting the option, press ➔ and then proceed in the same way as in the steps 3 and 4 of the section "Switching On the TV and Automatically Tuning" on pages 7 and 8.

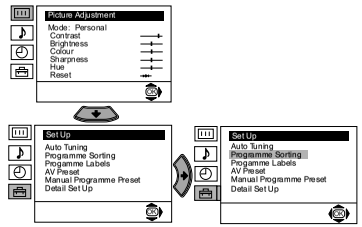

PROGRAMME SORTING

The "Programme Sorting" option in the "Set Up" menu allows you to change the order in which the channels (TV Broadcast) appear on the screen.

To do this: after selecting the option, press ➔ and then proceed in the same way as in step 5 b) of the section "Switching On the TV and Automatically Tuning" on page 8.

continued...

EN

Level 1	Level 2	Level 3 / Function

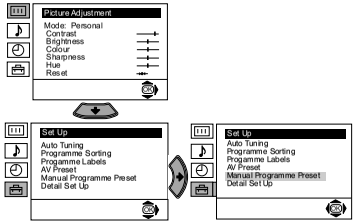

MANUAL PROGRAMME PRESET

The "Manual Programme Preset" option in the "Set Up" menu allows you to:

a) Preset channels or the VCR channel one by one to the programme order of your choice. To do this:

1 After selecting the "Manual Programme Preset" option, press ➔ then with **Programme** option highlighted press ➔. Press ⬇ or ⬆ to select on which programme number you want to preset the channel. Then press ⬅.

ⓘ For a VCR, select programme number "0" only.

2 After selecting the **Channel** option, press ➔. Then press the number buttons to enter directly the channel number of the TV Broadcast or the channel of the VCR signal. If you do not know the channel number, press ⬇ or ⬆ to search for it. When you tune the desired channel, press **OK** twice to store.

Repeat all the above steps to tune and store more channels.

b) Label a channel using up to five characters.

To do this: Highlighting the **Programme** option, press the **PROG +/-** button to select the programme number with the channel you wish to name. When the programme you want to name appears on the screen, select the **Label** option and press ➔. Next press ⬇ or ⬆ to select a letter, number or "-" for a blank. Press ➔ to confirm this character. Select the other four characters in the same way. After selecting all the characters, press **OK** twice to store.

c) Fine tune the broadcast reception. Normally the automatic fine tuning (AFT) will give the best possible picture, however you can manually fine tune the TV to obtain a better picture reception in case the picture is distorted.

To do this: while watching the channel (TV Broadcast) you wish to fine tune, select the **AFT** option and press ➔. Next press ⬇ or ⬆ to adjust the fine tuning between -15 and +15. Finally press **OK** twice to store.

d) Skip any unwanted programme numbers when they are selected with the PROG + / - buttons.

To do this: Highlighting the **Programme** option, press the **PROG +/-** button to select the programme number you want to skip. When the programme you want to skip appears on the screen, select the **Skip** option and press ➔. Next press ⬇ or ⬆ to select **Yes**. Finally press **OK** twice to confirm and store.

To cancel this function afterwards, select "No" instead of "Yes" in the step above.

e) View and record scrambled channels when using a decoder connected to Scart ⇥3 / ⇥S 3 directly or through a VCR.

To do this: select the **Decoder** option and press ➔. Next press ⬇ or ⬆ to select **On**. Finally press **OK** twice to confirm and store.

To cancel this function afterwards, select "Off" instead of "On" in the step above.

continued...

EN

Teletext

Teletext is an information service transmitted by some TV stations. The index page of the teletext service (usually page 100) gives you information on how to use the service. To operate teletext, use the remote control buttons as indicated below.

Teletext errors may occur if you use a channel (TV Broadcast) with a weak signal.

To switch on Teletext :

After selecting the TV channel which carries the teletext service you wish to view, press .

To select a Teletext page:

Input 3 digits for the page number, using the numbered buttons.

- *If you make a mistake, retype the correct page number.*
- *If the counter on the screen continues searching, it is because the page is not available. If this is the case, input another page number*

To access the next or preceding page:

Press **PROG +** ( ) or **PROG -** ( ).

To superimpose teletext on to the TV:

Whilst you are viewing teletext, press . Press it again to cancel teletext mode.

To freeze a teletext page:

Press / . Press it again to cancel the freeze.

To reveal concealed information (e.g: answer to a quiz):

Press / . Press it again to conceal the information.

To select a sub page:

A teletext page may consist of several sub pages. In this case the page number that appears on the upper left corner will change from white to green and one or more arrows will appear next to the page number. Repeatedly press the ◆ or ◆ buttons on the remote control to watch the desired sub page.

To Switch Off Teletext:

Press .

Fastext/TOPtext

Fastext / TOPtext service lets you access Teletext pages with one button push. When you are in Teletext mode and Fastext / TOPtext is broadcast, a colour coded menu appears at the bottom of the teletext page. Press the appropriate coloured button (red, green, yellow or blue) to access the page corresponding to your menu choice.

EN

Remote Control Configuration for VCR/DVD

In it's default condition this remote control will operate the basic functions of this Sony TV, Sony DVDs and most Sony VCRs. To control VCRs and DVDs of other manufacturers (and some Sony VCR models), please complete the following steps:

- Before you start, look up the 3 digit code for your brand of DVD or VCR from the list below. On those brands that have more than one code, enter the first code number.
- Sony will endeavour to update the software according to market changes. Therefore, please refer to the code table included with the remote control for the latest code set.

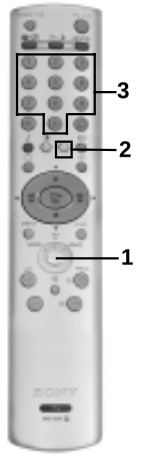

1 Press the Media Selector button on the remote control repeatedly until the required green light (VCR or DVD) is lit.

If Media Selector is on TV position, code numbers will not be stored.

2 Before the green light goes out, press and hold the yellow button for approximately 6 seconds until the green light starts flashing.

3 Whilst the green light is flashing, enter all three digits of the code for your brand of VCR or DVD using the number buttons on the remote control.

If your selected code is entered correctly, all three green lights will be lit momentarily.

4 Turn on your VCR or DVD and check that the main functions work.

- If your device is not working or some of the functions do not work please check that you entered the correct code set or try the next code listed against the brand.
- Your brand codes may be lost if weak batteries are not replaced within a few minutes. To reset your brand of DVD or VCR please repeat the above steps. A small label is added inside the battery door to allow you to record your brand codes.
- Not all brands are covered and not all models of every brand may be covered.

VCR Brand List

Brand	Code
SONY (VHS)	301, 302, 303, 308, 309
SONY (BETA)	303, 307, 310
SONY (DV)	304, 305, 306
AIWA	325, 331, 351
AKAI	326, 329, 330
DAEWOO	342, 343
GRUNDIG	358, 355, 360, 361, 320, 351
HITACHI	327, 333, 334
JVC	314, 315, 322, 344, 352, 353, 354, 348, 349
LG	332, 338
LOEWE	358, 355, 360, 361, 320, 351
MATSUI	356, 357
ORION	328
PANASONIC	321, 323
PHILIPS	311, 312, 313, 316, 317, 318, 358, 359
SAMSUNG	339, 340, 341, 345
SANYO	335, 336
SHARP	324
THOMSON	319, 350
TOSHIBA	337

DVD Brand List

Brand	Code
SONY	001
AIWA	021
DENON	018, 027, 020, 002
GRUNDIG	009, 028, 023, 024, 016, 003
HITACHI	025, 026, 015, 004
JVC	006, 017
KENWOOD	008
LG	015, 014
LOEWE	009, 028, 023, 024, 016, 003
MATSUI	013, 016
ONKYO	022
PANASONIC	018, 027, 020, 002
PHILIPS	009, 028, 023, 024, 016, 003
PIONEER	004
SAMSUNG	011, 014
SANYO	007
SHARP	019, 027
THOMSON	012
TOSHIBA	003
YAMAHA	018, 027, 020, 002

Specifications

TV system:
B

Colour system:
PAL
SECAM, NTSC 3.58, 4.43 (only Video In)

Channel Coverage:
VHF: C00-C05, C05A, C06-C09, C09A, C10-C12
UHF: C20-C69
CABLE: S02-S44

Picture Tube:
Flat Display FD Trinitron WIDE: 32" (approx. 82 cm. measured diagonally)

Rear Terminals

1 / 1	21-pin Scart connector including audio / video input, YUV input, TV audio / video output.
2 / 2	21-pin Scart connector including audio / video input, YUV input, monitor audio / video output.
3 / 3	21-pin Scart connector including audio / video input, S video input, selectable audio / video output.
	audio outputs (Left / Right) - phono jacks

Side Terminals

4	S Video input – 4 pin DIN
4	video input – phono jack
4	audio input – phono jacks
	headphones jack

Sound Output:
2 x 20 W (music power)
2 x 10 W (RMS)

Power Consumption:
130 W

Standby Power Consumption:
0.3 W

Dimensions (w x h x d) :
approx. 892 x 565 x 584 mm.

Weight:
approx. 62.2 Kg.

Accessories supplied:
1 Remote Control (RM-934)
2 Batteries (IEC designated)
1 Scart adaptor
2 Scart cables

Other features:
- 100 Hz picture, Digital Plus.
- Teletext, Fastext, TOPtext (250 page TEXT memory).
- Sleep Timer.
- Dolby Virtual.
- BBE.
- PIP.
- Auto Format.

Design and specifications are subject to change without notice.

Ecological Paper - Totally Chlorine Free

EN

Troubleshooting

Here are some simple solutions to problems which may affect the picture and sound.

Problem	Solution
No picture (screen is dark) and no sound.	• Check the aerial connection. • Plug the TV in and press the ⏻ button on the front of the TV. • If the standby indicator ⏻ is on, press **TV** ⏻ button on the remote control.
Poor or no picture (screen is dark), but good sound.	• Using the menu system, select the "Picture Adjustment" menu and select "Reset" to return to the factory settings.
No picture or no menu information from equipment connected to the Scart connector.	• Check that the optional equipment is on and press the ⏎ button repeatedly on the remote control until the correct input symbol is displayed on the screen.
Good picture, no sound.	• Press the + button on the remote control. • Check that "TV Speakers" is "On" in the "Detail Set Up" menu. • Check that headphones are not connected.
No colour on colour programmes.	• Using the menu system, select the "Picture Adjustment" menu and select "Reset" to return to factory settings.
Distorted picture.	• Check that you have not connected at the same time equipment to the connectors **A** and **B** (see illustration on page 18). • Check that you have not connected at the same time equipment to **G2** and **G3** (see illustration on page 18).
Distorted picture when changing programmes or selecting teletext.	• Turn off any equipment connected to the Scart connector on the rear of the TV.
Picture slanted.	• Using the menu system, select the "Picture Rotation" option in the "Detail Set Up" menu to correct the picture slant.
Noisy picture when viewing a TV channel.	• Using the menu system, select the "Manual Programme Preset" menu and adjust Fine Tuning (AFT) to obtain better picture reception. • Using the menu system, select the "Noise Reduction" option in the "Detail Set Up" menu and select "Auto" to reduce the noise in the picture.
No unscrambling or unstable picture whilst viewing a scrambled channel with a decoder connected directly to the Scart connector 3 / 3.	• Using the menu system, select the "Set Up" menu. Then enter to "Detail Set Up" option and set "AV3 Output" to "TV".
Top bent picture when viewing a VCR	• Connect VCR only by tuning to programme number "0" (see page 13) or via any "AV input" (see page 18).
Remote control does not function.	• Check that the Media Selector on the remote control is set to the device you are using (VCR, TV or DVD). • If the remote control does not operate the VCR or DVD even when the Media Selector has been set correctly. Enter the necessary code set as explained on "Remote Control Configuration for VCR / DVD" chapter of this instruction manual. • Replace the batteries.
The standby indicator ⏻ on the TV flashes.	• Contact your nearest Sony service centre.

⚠ If you continue to experience problems, have your TV serviced by qualified personnel. Never open the casing yourself.

SECTION 2 DISASSEMBLY

2-1. Rear Cover Removal

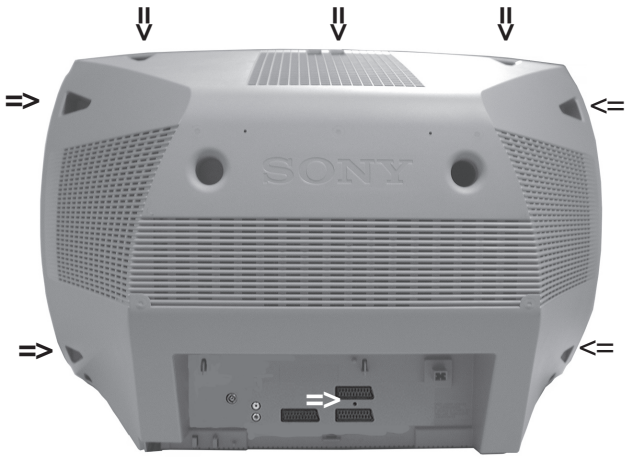

Remove the rear cover fixing screws indicated. Take care when removing the rear cover not to damage the speaker cables [Disconnect the speaker connector] as speakers are fitted inside the rear cover.

2-2. Speaker Connector Disconnection

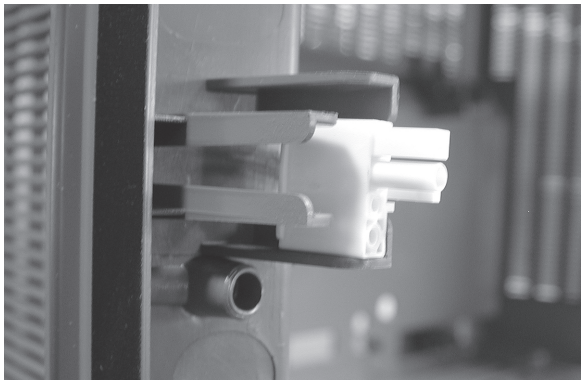

Before completely removing the rear cover disconnect the speaker connector which is located on the inside.

2-3. Chassis Removal and Refitting

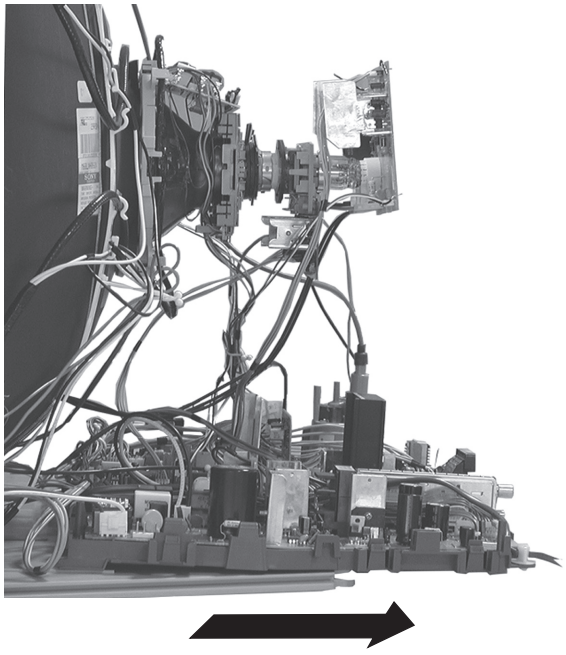

To remove lift the main bracket rear slightly and slide the chassis away from the beznet. Ensure that the interconnecting leads are released from their purse locks to prevent damage being caused.

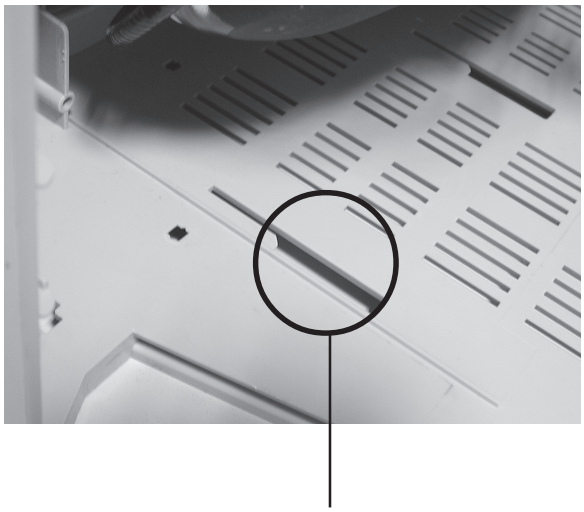

When refitting the chassis ensure that the main bracket is located in the beznet guide slots before sliding the chassis forwards. Refit the interconnecting leads in their respective purse locks.

2-4. Service Position

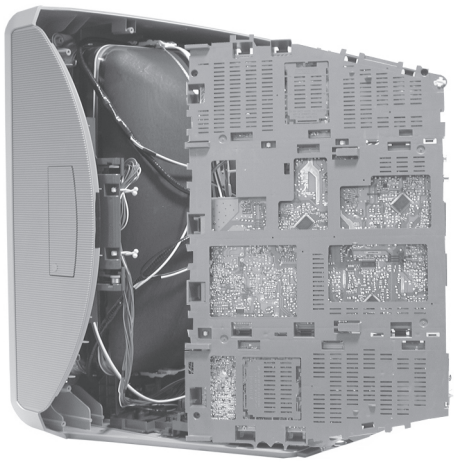

Position the chassis as indicated to access the solder side. To gain access to the underside of the boards follow the instructions on page 16. [Removal and Replacement of the main bracket bottom plates].

2-5. D and G Board Removal

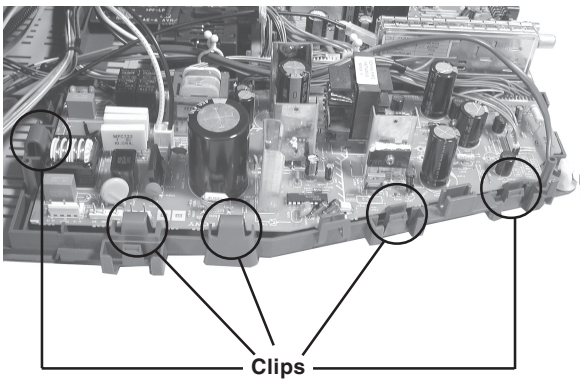

To remove the G Board release the clips circled and ease the board gently away from the support bracket. Removal of the D Board follows the same procedure.

2-6. Side Control Module Removal

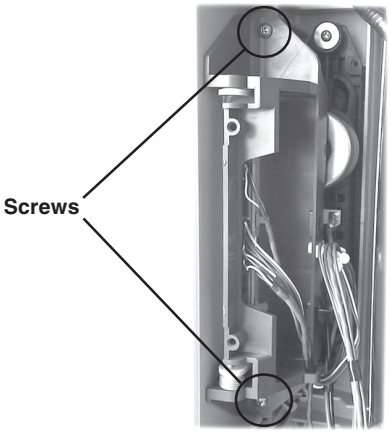

Remove the two screws fixing the user control module to the side of the set. The control module can then be removed by sliding it towards the rear of the set allowing access to the H2 Board.

2-7. H2 Board Removal

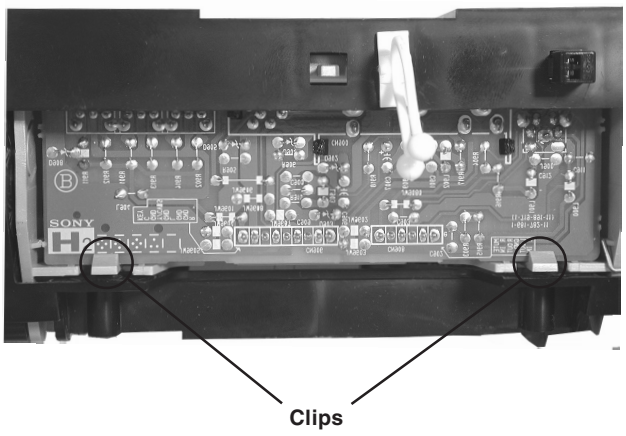

To remove the H2 Board release the two clips circled and ease the board gently away from the support bracket.

2-8. M Board Removal

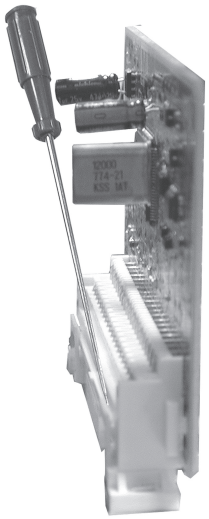

To remove the M Board gently release the two clips with a screwdriver and remove the board from its socket vertically.

2-9. Service Connector for M Board

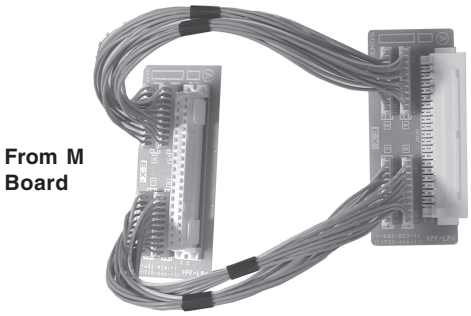

Extender Board Assembly A-1642-293-A

If the M Board needs to be removed for testing when the chassis is placed in its service position, it would be necessary to use an extender board and extension cable as indicated above.
The Extender board and extension cable are available as a service part by ordering the part number as indicated.

2-10. Wire Dressing

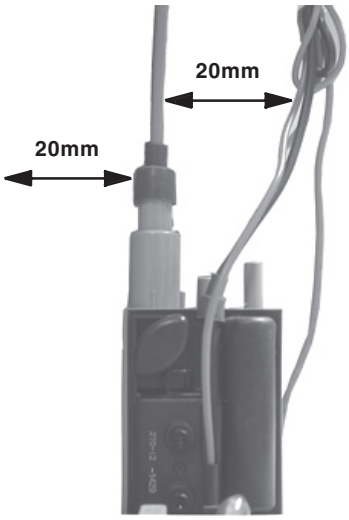

Ensure that wires do not touch heatsinks and high temperature hotspots. All wires must be kept at a minimum distance of 20mm away from the EHT lead

2-11. Picture Tube Removal

WARNING:
BEFORE REMOVING
THE ANODE CAP

High voltage remains in the CRT even after the power is disconnected. To avoid electric shock, discharge CRT ***before*** attempting to remove the anode cap. Short between anode and CRT coated earth ground strap.

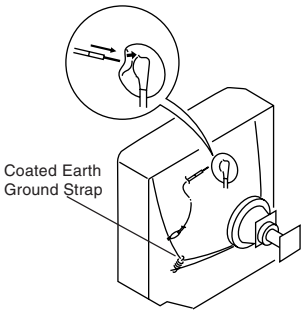

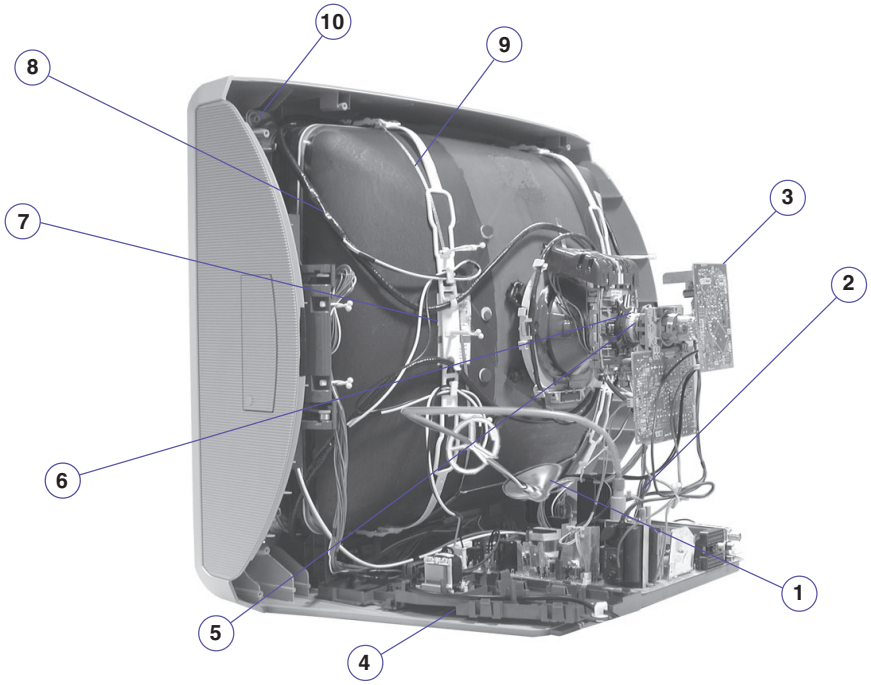

1. Discharge the anode of the CRT and remove the anode cap.
2. Unplug all interconnecting leads from the Deflection yoke, neck assy, degaussing coils and CRT grounding strap.
3. Remove the C Board from the CRT.
4. Remove the chassis assembly.
5. Loosen the Neck assembly fixing screw and remove.
6. Loosen the Deflection yoke fixing screw and remove.
7. Place the set with the CRT face down on a cushion and remove the Degaussing Coil holders.
8. Remove the Degaussing Coils.
9. Remove the CRT grounding strap and spring tentioners.
10. Unscrew the four CRT fixing screws [located on each CRT corner] and remove the CRT.
    [Take care not to handle the CRT by the neck.]

Removal of the Anode-Cap

*** REMOVING PROCEDURES.**

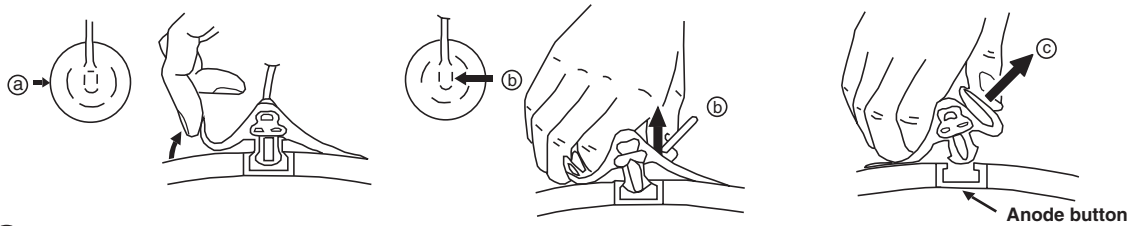

① Turn up one side of the rubber cap in the direction indicated by the arrow ⓐ

② Using a thumb pull up the rubber cap firmly in the direction indicated by the arrow ⓑ

③ When one side of the rubber cap is separated from the anode button, the anode-cap can be removed by turning up the rubber cap and pulling it up in the direction of the arrow ⓒ

How to handle the Anode-Cap

1. To prevent damaging the surface of the anode-cap do not use sharp materials.
2. Do not apply too great a pressure on the rubber, as this may cause damage to the anode connector.
3. A metal fitting called a shatter hook terminal is fitted inside the rubber cap.
4. Do not turn the rubber foot over excessively, this may cause damage if the shatter hook sticks out.

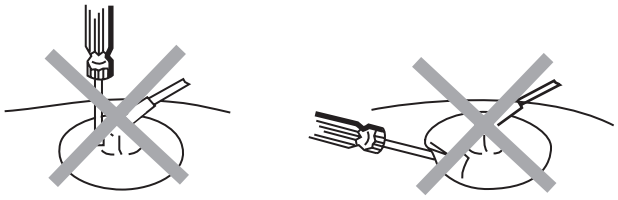

REMOVAL AND REPLACEMENT OF THE MAIN-BRACKET BOTTOM PLATES.

(1) REMOVING THE PLATES

In the event of servicing being required to the solder side of the D or G printed wiring boards, the bottom plates fitted to the main chassis bracket require to be removed.
This is performed by cutting the gates with a sharp wire cutter at the locations indicated by the arrows.

Note : There are 2 plates fitted to the main bracket and secured by 3 gates.
Only remove the necessary plate to gain access to the printed wiring board.

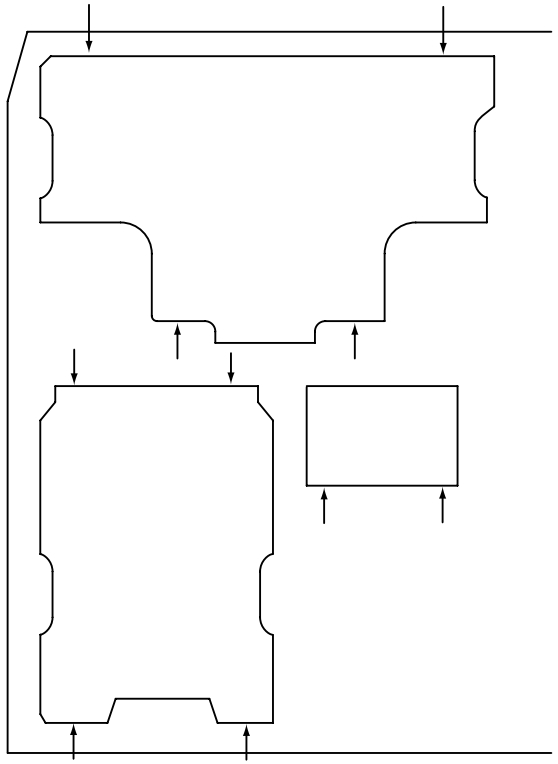

⚠ For safety reasons, on no account should the plates be removed and not refitted after servicing.

(2) REFITTING THE PLATES

Because the plates differ in size it is important that the correct plates are refitted in their original location.

Please note that the plates need to be rotated 180 degrees from their cut position to allow the tabs to be fitted into their catch positions.

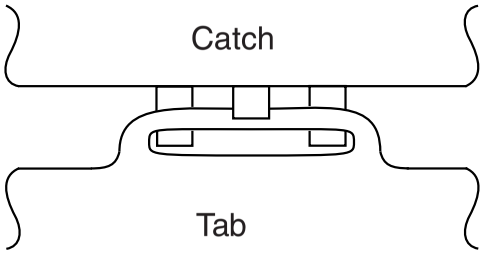

SECTION 3 SET-UP ADJUSTMENTS

- When complete readjustment is necessary or a new picture tube is installed, carry out the following adjustments.
- Unless there are specific instructions to the contrary, carry out these adjustments with the rated power supply.
- Unless there are specific instructions to the contrary, set the controls and switches to the following settings :

  Contrast ..... normal

  Brightness ..... normal

Carry out the adjustments in the following order :

3-1. Beam Landing.
3-2. Convergence.
3-3. Focus.
3-4. White Balance.

Note : Test equipment required.
1. Color bar/pattern generator.
2. Degausser.
3. Oscilloscope.
4. Digital multimeter.

3-1. Beam Landing

Preparation :

1. In order to reduce the influence of geomagnetism on the set's picture tube, face it in an easterly or westerly direction.
2. Switch on the TV set's power and degauss with a degausser.

(1) Adjustment of Correction Magnet for Y-Splitting Axis.

1. Input a crosshatch signal from the pattern generator.
2. Set the Picture control to minimum and confirm that the Brightness control is set to normal.
3. Position the neck assembly as indicated in Fig.3-2.
4. Loosen the deflection yoke fixing screw.
5. Move the deflection yoke as far forward as is possible.
6. Adjust the upper and lower pin symmetrically by opening or closing the Y-splitting axis correction magnets located on the neck assembly. [See Fig 3-3]
7. Return the deflection yoke to its original position and re-tighten its fixing screw.

Fig.3-1

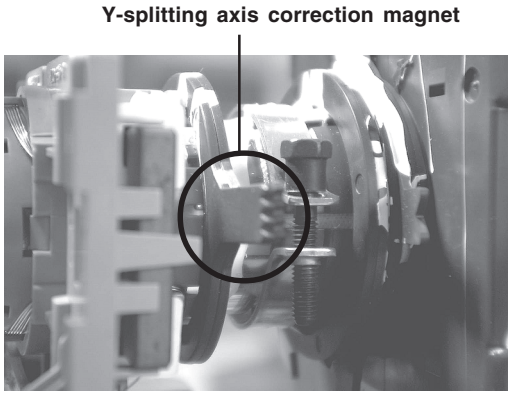

Caution :

High voltages are present on the Deflection yoke terminals - take care when handling the Deflection yoke whilst carrying out adjustments.

(2) Landing

Note : Before carrying out the following adjustments adjust the magnets as indicated below [See Fig.3-4].

1. Input a crosshatch signal from the signal generator.
2. Rough-adjust the focus and horizontal convergence.
3. Switch from the crosshatch pattern to an all-red pattern.
4. Move the deflection yoke backwards and adjust with the purity magnet so that the red is at the centre and it aligns symmetrically [See Fig.3-5].
5. Move the deflection yoke forward to the point where the entire screen just becomes red [Mark its position].
6. Move the deflection yoke further forward until the screen just changes colour at the edges. [Mark its position]
7. Position the deflection yoke between the two marks indicated above.
8. Input a crosshatch pattern from the pattern generator and rotate the deflection yoke so that the horizontal lines are parallel with the top and bottom of the screen.
9. When the position of the deflection yoke has been determined, fasten it with its fixing screw.
10. Switch the pattern generator to green then blue and confirm the purity.
11. If the beam does not land correctly in all the corners of the screen, use disk magnets to correct it. [Confirm the corner landing for green and blue]

Fig.3-2

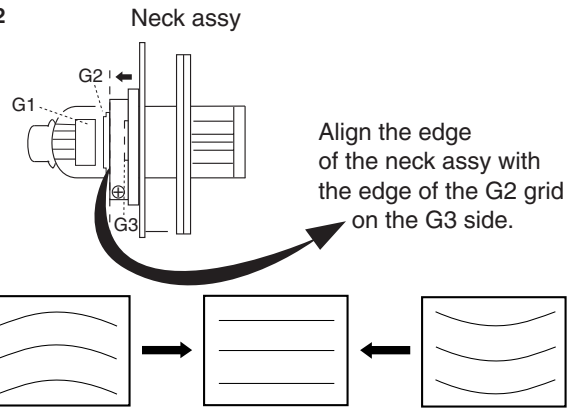

Fig.3-3

Fig.3-4

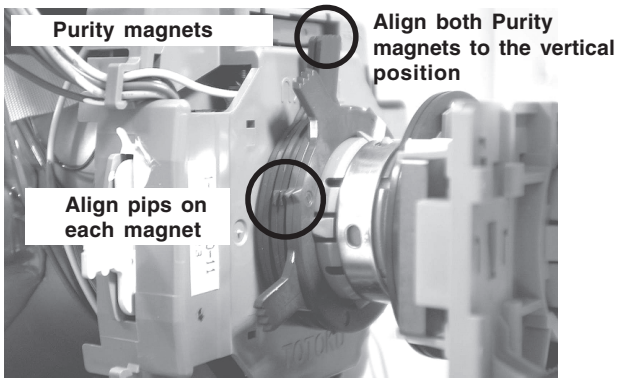

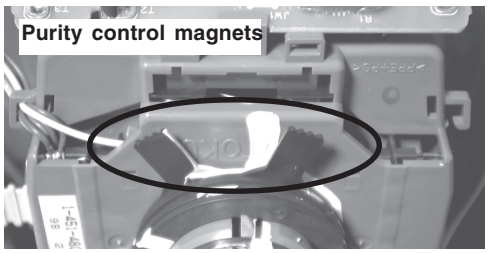

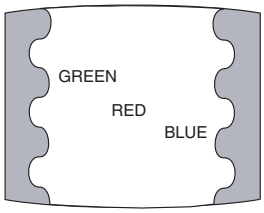

3-2. Convergence

(1) Screen centre convergence [Static convergence]

1. Input a dot pattern signal from the pattern generator.
2. Normalize the picture setting.
3. [Moving vertically], adjust the V.STAT magnet so that the vertical red, green and blue dots coincide at the centre of the screen.

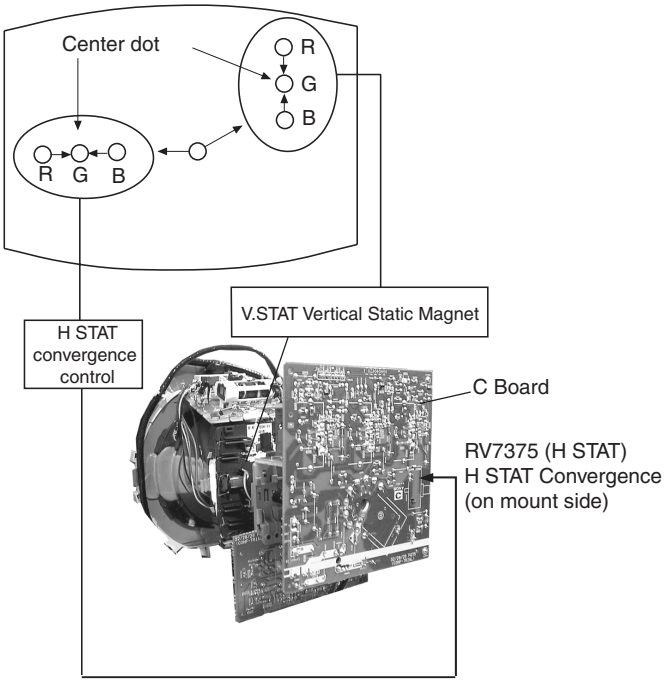

Fig.3-5

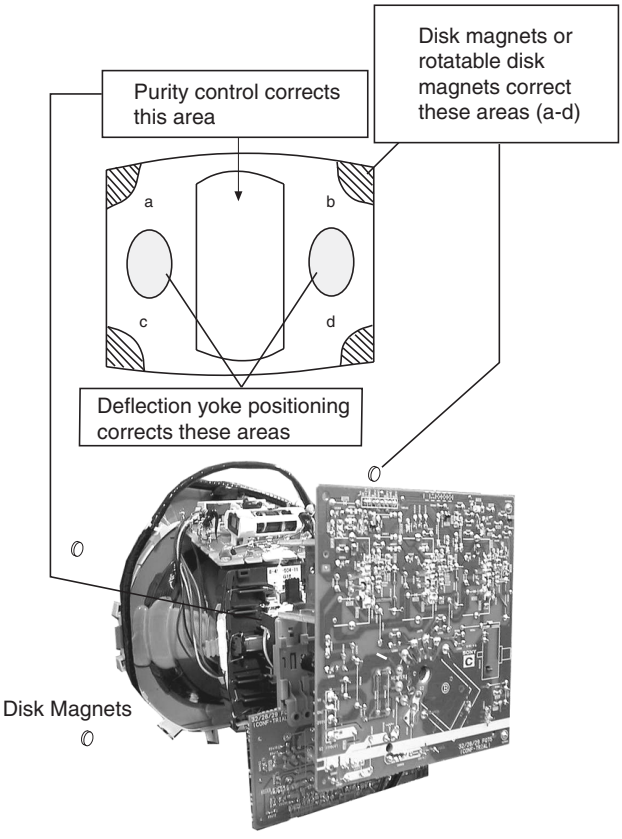

By opening or closing the V.STAT magnet, the red green and blue dots move in the direction indicated below.

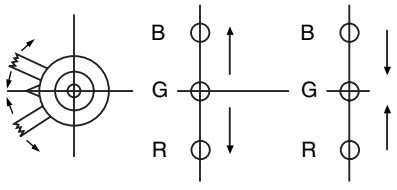

Note: Do not adjust the H.STAT by rotating the V.STAT magnets as this can affect the focus setting.

4. Correction for HMC [Horizontal mis-convergence] and VMC [Vertical mis-convergence] by using the BMC [Hexapole] magnet.

a). HMC correction by BMC [Hexapole] magnet and movement of the electron beam.

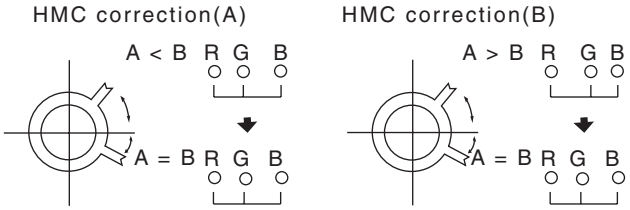

b). VMC correction by BMC [Hexapole] magnet and movement of the electron beam.

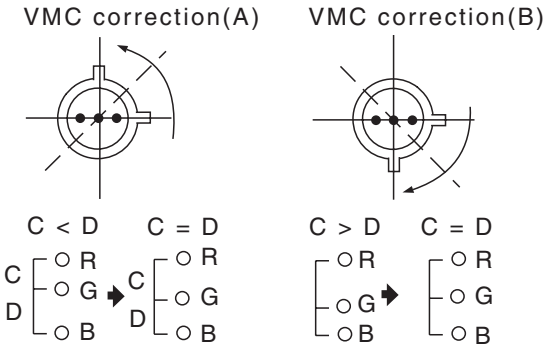

HAMP Adjustment

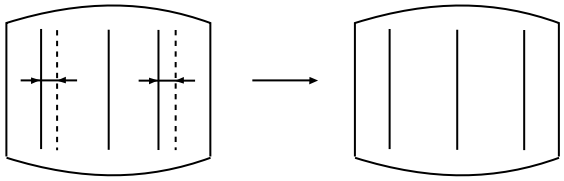

Adjust the HAMP using HAMPL and HAMPR registers in the Dynamic Convergence section of the service menu.

HTIL Adjustment

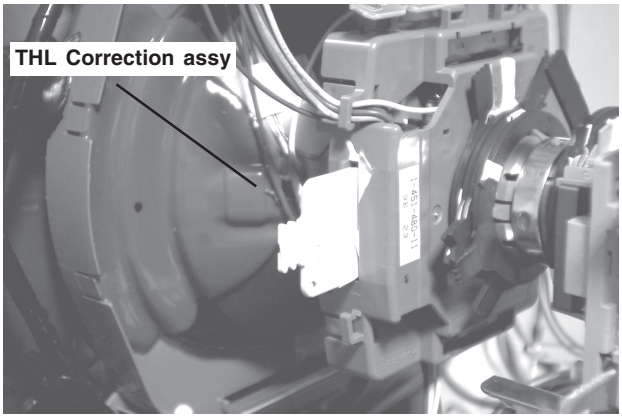

HTIL correction can be performed by adding a THL correction assembly to the Deflection yoke.

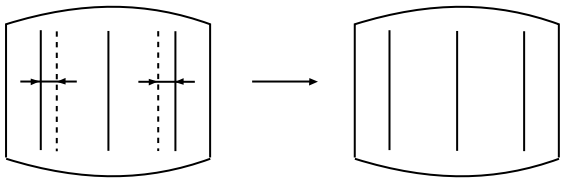

YCH Adjustment

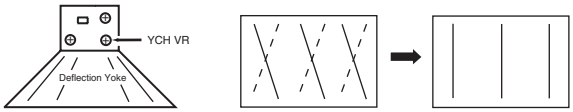

TLV Adjustment

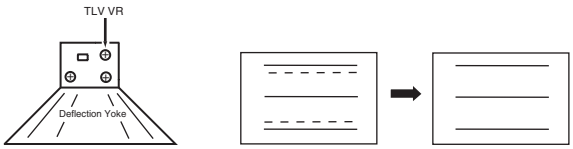

H-TRAP Adjustment

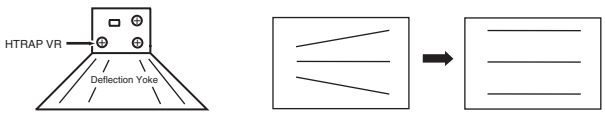

The H-TRAP should not be adjusted unless absolutely necessary as it affects the TLV settings.

Layout of each control

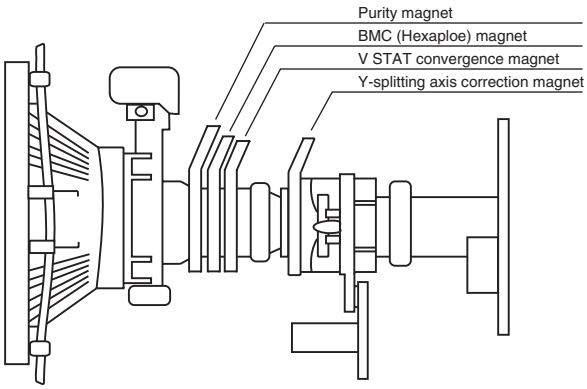

Note : If you are unable to adjust the corner convergence properly, this can be corrected with the use of permalloy magnets.

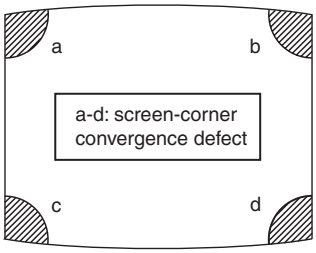

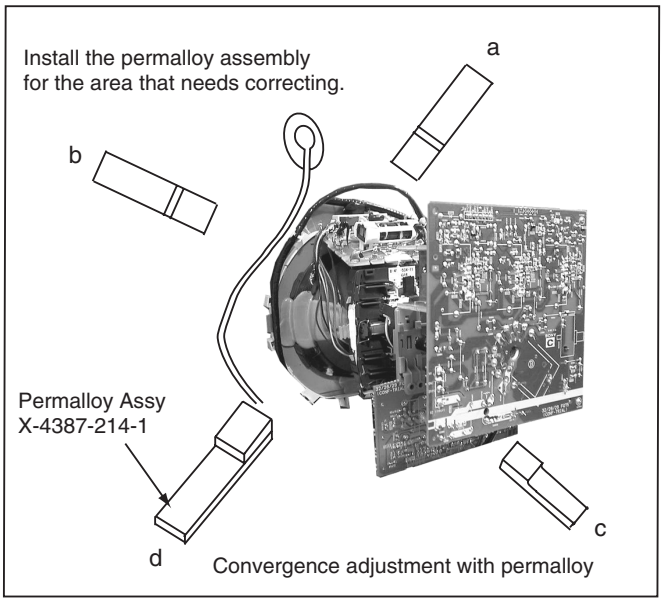

3-3. Focus Adjustment

1. Receive a television broadcast signal.
2. Normalize the picture setting.
3. Adjust the focus control located on the flyback transformer to obtain the best focus at the centre of the screen.
   Bring only the centre area of the screen into focus, the magenta-ring appears on the screen. In this case, adjust the focus to optimize the screen uniformly.

3-4. Screen (G2), White Balance

[Adjustment in the service mode using the remote commander]

G2 adjustment

1. Input a dot signal from the pattern generator.
2. Set the Picture, Brightness and Colour to minimum.
3. Apply 165V DC from an external power supply to the R, G and B cathodes of the CRT.
4. Whilst watching the picture, adjust the G2 control [SCREEN] located on the flyback transformer to the point just before the flyback return lines disappear.

White balance adjustment for TV mode

1. Input an all-white signal from the pattern generator.
2. Program the Remote Commander for operation in Service Mode. [See Page 21].
3. Enter into the 'Service Mode' by pressing 'VIDEO' button twice and 'MENU' on the Service Commander.
4. Select 'Service' from the on screen menu display and press 'Right Arrow'.
5. The 'Service' menu will appear on the screen.[See Page 22]
6. Set the 'Contrast' to MAX.
7. Set the 'R-Drive' to 50.
8. Adjust the 'G-Drive' and the 'B-Drive' so that the white balance becomes optimum.
9. Press the 'OK' button to write the data for each item.
10. Set the 'Contrast' to MIN.
11. Set the 'R-Cutoff' to 29.
12. Adjust the 'G-Cutoff', and the 'B-Cutoff' with the left and right buttons on the remote commander so that the white balance becomes optimum.
13. Press the 'OK' button to write the data for each item.

SECTION 4 CIRCUIT ADJUSTMENTS

4-1. Electrical Adjustments

Service adjustments to this model can be performed using the supplied remote Commander RM-934.

Programming the Remote Commander for Operation in Service Mode

1. Press the VCR/TV/DVD button until the TV LED lights.
2. Press and hold the yellow button for approx. 5 seconds until the TV LED flashes quickly.
3. Press 99999. All three LED's should light.
   The remote commander is now set to Service Mode.
4. To return the remote commander to normal operation mode repeat steps 1. and 2. then press 00000. All three LED's should light.
   The remote commander is now set to normal mode.

Setting the TV into Service Mode

1. Program the remote commander for operation in Service Mode as described above.
2. Turn on the TV main power switch.
3. Press the video standby button on the remote commander twice.
   'TT __' will appear in the upper right corner of the screen.
   Other status information will also be displayed.
4. Press 'MENU' on the remote commander to obtain the following menu on the screen.

```
Geometry
Service
Scanrate
DAC
Dyn. Conv.
PiP
Sound
IF adjust
Error Menu

AE6B v0.14 (Jun 2001)
Factory data FFh  FFh
MSP Device : MSP3411G
```

5. Move to the corresponding adjustment item using the up or down arrow buttons on the Remote Commander.
6. Press the right arrow button to enter into the required menu item.
7. Press the 'Menu' button on the Remote Commander to quit the Service Mode when all adjustments have been completed.

Note :

- After carrying out the service adjustments, to prevent the customer accessing the 'Service Menu' switch the TV set OFF and then ON.

GEOMETRY

ABL TH	(0, 3)	0
ABL MODE	(0, 3)	0
P ABL	(0, 15)	15
V SIZE	(0, 63)	35
V POSITION	(0, 63)	33
V COMP	(0, 3)	1
V LIN	(0, 15)	7
S CORRECTION	(0, 15)	7
H SIZE	(0, 63)	44
PIN AMP	(0, 63)	32
UP CORNERPIN	(0, 63)	29
M PIN	(0, 3)	2
LO CORNERPIN	(0, 63)	29
TRAPEZIUM	(0, 15)	2
H POSITION	(0, 63)	40
AFC BOW	(0, 15)	8
AFC ANGLE	(0, 15)	9
LEFT BLK	(0, 63)	34
RIGHT BLK	(0, 63)	17
V ASPECT	(0, 63)	47
AKBTIM1	(0, 3)	2
AKBTIM2	(0, 1)	0
IKR		*1*
HNG		*0*
VNG		*0*

DYN. CONV.

RANGE	(0, 63)	63
YupL	(0, 1)	0
VAL	(0, 63)	30
YlowL	(0, 1)	0
VAL	(0, 63)	31
MBOWupL	(0, 1)	0
VAL	(0, 63)	31
MBOWlowL	(0, 1)	0
VAL	(0, 63)	32
HAMPL	(0, 1)	0
VAL	(0, 63)	37
YupR	(0, 1)	0
VAL	(0, 63)	30
YlowR	(0, 1)	0
VAL	(0, 63)	30
MBOWupR	(0, 1)	0
VAL	(0, 63)	32
MBOWlowR	(0, 1)	0
VAL	(0, 63)	32
HAMPR	(0, 1)	0
VAL	(0, 63)	36
UP Y	(0, 1)	0
VAL	(0, 63)	31
LOW Y	(0, 1)	0
VAL	(0, 63)	33
H STAT	(0, 1)	0
VAL	(0, 63)	33
UP CORR	(0, 1)	0
VAL	(0, 63)	34
LOW CORR	(0, 1)	0
VAL	(0, 63)	19

IF ADJUST

Automute	1
Audio Gain	0
L Gating	0

SERVICE

SUB COL	(0, 63)	Adj
SUB HUE	(0, 63)	31
SUB SHARP	(0, 63)	30
SUB BRIGHT	(0, 63)	13
SUB CONT	(0, 15)	12
R-DRIVE	(0, 63)	50
G-DRIVE	(0, 63)	Adj
B-DRIVE	(0, 63)	Adj
R CUTOFF	(0, 63)	28
G CUTOFF	(0, 63)	24
B CUTOFF	(0, 63)	46
Br TXT	(0, 15)	7
Br OSD	(0, 15)	10

DAC

CONFIG	*00000000*	
MPIN CONT	(0, 255)	96
HLIN	(0, 255)	83
HTRAP	(0, 255)	127
ROT. COIL	(0, 255)	130
PHOCUS PH	(0, 255)	90

SOUND

M-N	(0, 511)	200
M-D	(-128, -1)	-20
M-S	(+0, +127)	+20
S-M	(+0, +127)	+10
D-M	(-128, -1)	-10
N-M	(0, 1023)	496
BBE	(+0, +68)	+28
B1	(-96, +96)	+0
B2	(-96, +96)	+0
B3	(-96, +96)	+0
B4	(-96, +96)	+0
B5	(-96, +96)	+0
SW L	(-128, +0)	+0
SW F	(+5, +40)	+30
NICAM C AD	10001	
NICAM Error	(0, 2047)	0
Stereo	(-128, +127)	+0
Status	0000000110	

ERROR MENU

E02	OCP	(0, 255)	0
E03	OVP	(0, 255)	0
E04	VSYNC	(0, 255)	0
E05	IKR	(0, 255)	0
E06	IIC	(0, 255)	0
E07	NVM	(0, 255)	0
E08	HPROT	(0, 255)	0
E09	TUNER	(0, 255)	0
E10	SOUNDP	(0, 255)	0
E11	-	(0, 255)	0
E12	SCANRATE	(0, 255)	0
E13	DAC	(0, 255)	0
E14	BACKEND	(0, 255)	0
E15	DYN CON	(0, 255)	0
E16	PIP	(0, 255)	0

WORKING TIME

HOURS	14
MINUTES	7

Sub Brightness Adjustment

1. Input a Monoscope pattern.
2. Program the Remote Commander for operation in Service Mode. [See Page 21].
3. Press 'VIDEO' 'VIDEO' 13 on the Remote Commander.
4. Adjust the 'Sub-Brightness' data so that there is barely a difference between the 0 IRE and 10 IRE signal levels.

Sub Contrast Adjustment

1. Input a video signal that contains a small 100% white area on a black background.
2. Connect an digital voltmeter to Pin 10 of J7375 [C Board].
3. Program the Remote Commander for operation in Service Mode. [See Page 21].
4. Adjust the Sub-Contrast [Using 'VIDEO' 'VIDEO' '11'] to obtain a voltage of 105 +/- 5V.

Sub Colour Adjustment

1. Receive a PAL colour bar signal.
2. Connect an oscilloscope to Pin 6 of CN7001 [A Board].
3. Program the Remote Commander for operation in Service Mode. [See Page 21].
4. Adjust the 'Sub Colour' [Using 'VIDEO' 'VIDEO' '12'] so that the Cyan, Magenta and Blue colour bars are of equal levels as indicated below.

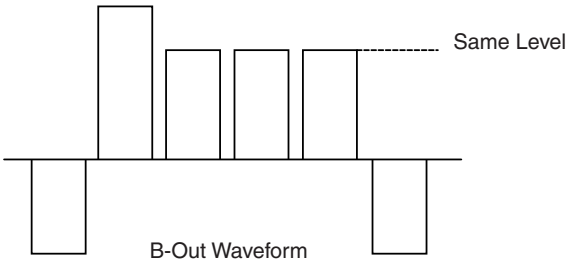

Deflection System Adjustment

1. Program the Remote Commander for operation in Service Mode. [See Page 21] and enter into the 'Geometry' service menu.
2. Select and adjust each item in order to obtain the optimum image.

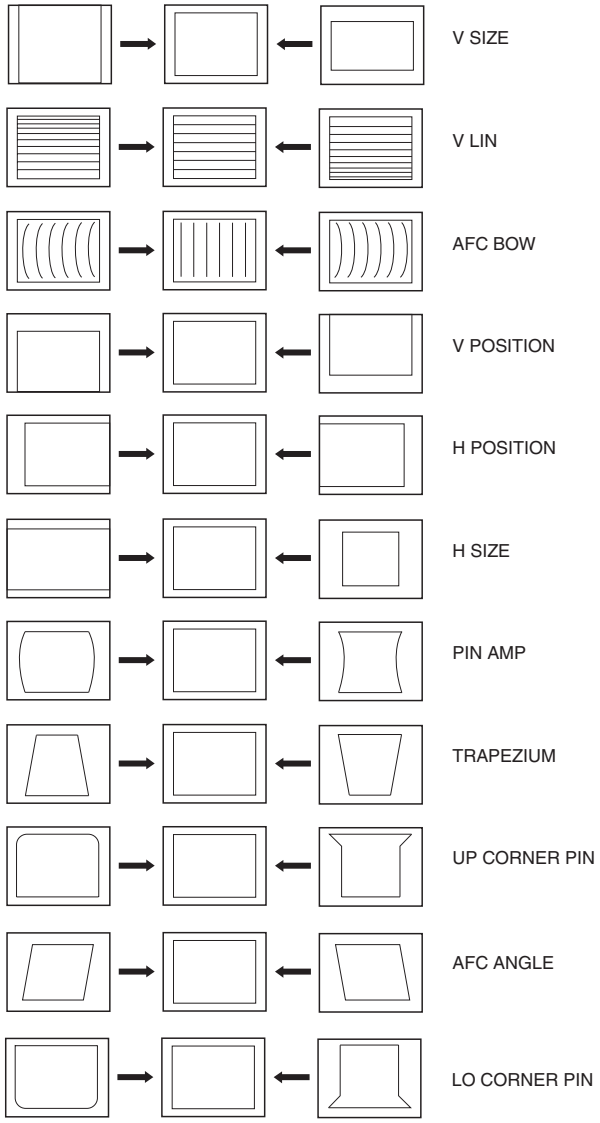

GEOMETRY		
ABL TH	(0, 3)	0
ABL MODE	(0, 3)	0
P ABL	(0, 15)	15
V SIZE	(0, 63)	35
V POSITION	(0, 63)	33
V COMP	(0, 3)	1
V LIN	(0, 15)	7
S CORRECTION	(0, 15)	7
H SIZE	(0, 63)	44
PIN AMP	(0, 63)	32
UP CORNERPIN	(0, 63)	29
M PIN	(0, 3)	2
LO CORNERPIN	(0, 63)	29
TRAPEZIUM	(0, 15)	2
H POSITION	(0, 63)	40
AFC BOW	(0, 15)	8
AFC ANGLE	(0, 15)	9
LEFT BLK	(0, 63)	34
RIGHT BLK	(0, 63)	17
V ASPECT	(0, 63)	47
AKBTIM1	(0, 3)	2
AKBTIM2	(0, 1)	0
IKR		*1*
HNG		*0*
VNG		*0*

4-2. TEST MODE 2:

Test Mode 2 is available by rogramming the Remote Commander for operation in Service Mode [As shown on Page 21] then pressing the 'VIDEO' button twice, OSD 'TT' appears. The functions described below are available by selecting the two numbers. To release the 'Test mode 2', press 00, 10, 20 ... twice or switch the TV set into Stand-by mode. In 'TT Menu' mode, it is possible to remove the Menu from the screen by pressing the Speaker Off button once. Pressing the Speaker OFF button a second time will cause the Menu to reappear. The function is kept even when the menu is not displayed on screen !!.

00	'TT' mode off
01	Picture maximum
02	Picture minimum
03	Set speaker/headphone Volume to 35%
04	Set speaker/headphone Volume to 50%
05	Set speaker/headphone Volume to 65%
06	Set speaker/headphone Volume to 80%
07	Ageing mode
08	Shipping Condition
11	Sub picture adjustment
12	Sub colour adjustment
13	Sub Brightness adjustment
14	Text H Position adjustment
15	Rotation Coil Test
16	Picture level 50%
19	Factory Mode Enable/Disable
21	Destination ADEKR
22	Destination BL
23	Destination ADEKR
24	Destination U
25	Destination ADEKR
26	Destination BL
27	Destination ADEKR
28	Destination ADEKR
31	Auto Shutoff Enable/Disable
36	Velocity Modulation (VM) OFF/ON test
41	Re-initialise NVM
43	Select Dual A sound
44	Select Dual B sound
45	Select Mono sound
46	Select Stereo sound
48	Set NVM as non virgin
49	Set NVM as virgin
53	FM Overmodulation Enable/Disable
55	Tuner selection (SONY/ALPS)
59	Select Model 3 Scarts + PIP or 2 Scarts
68	Enable/Disable X26 countermeasure (N problem)
73	Enable Zweiton D/K2 system (6.5/6.74)
74	Enable Zweiton D/K3 system (6.5/5.74)
78	Balance full right
79	Balance full left
87	Local keys test
99	Display Error and Working Time menu

Memo

5-1. BLOCK DIAGRAMS (1)

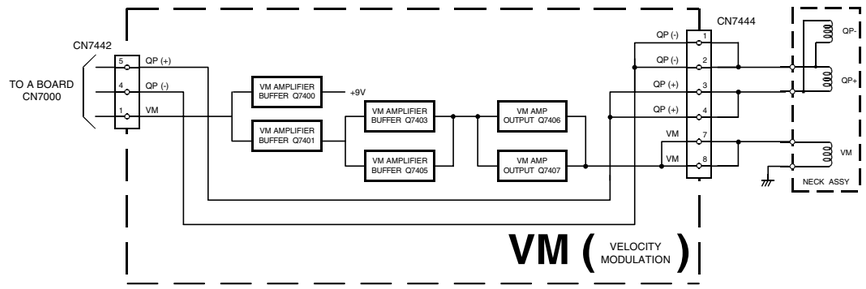

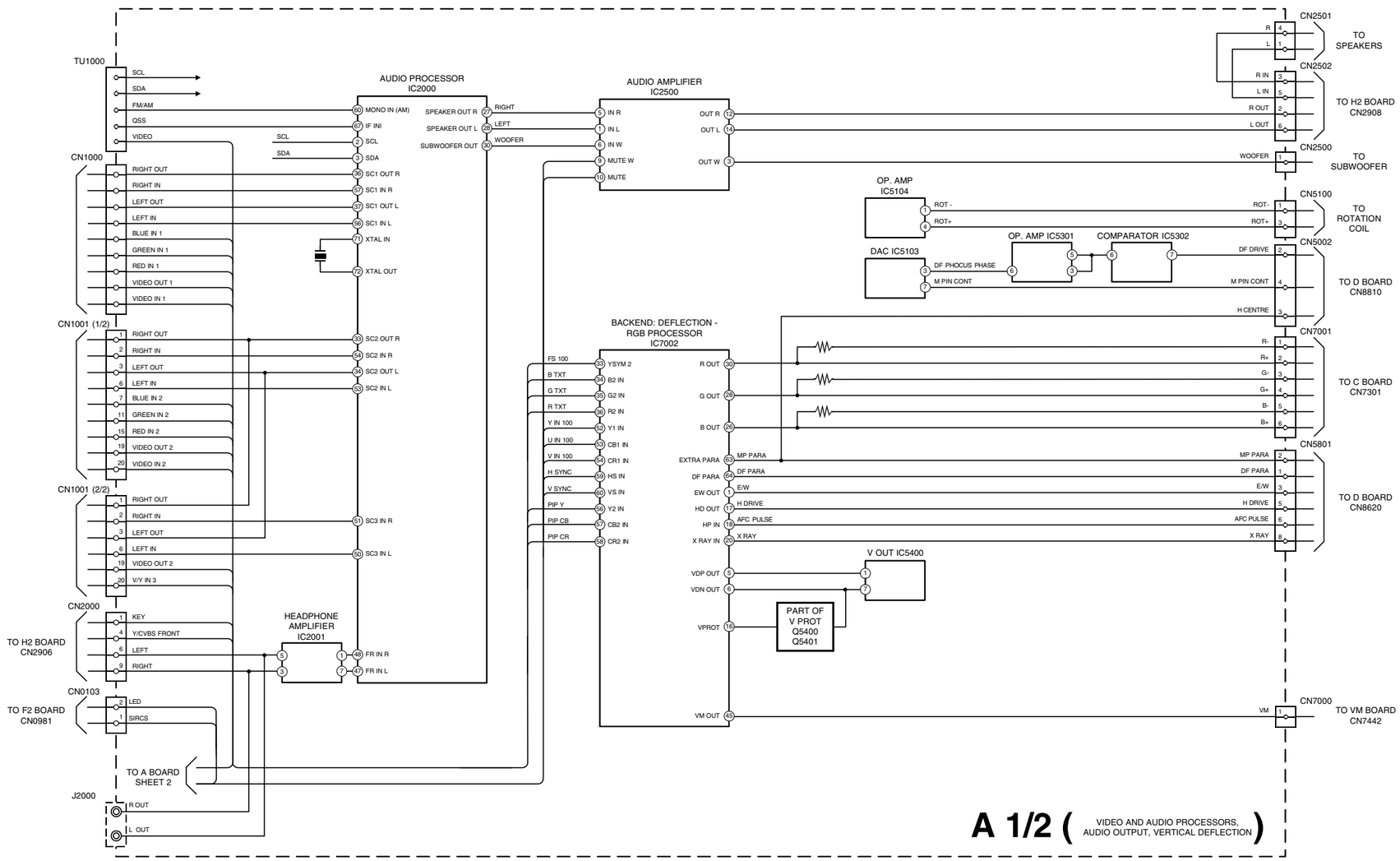

5-1. BLOCK DIAGRAMS (2)

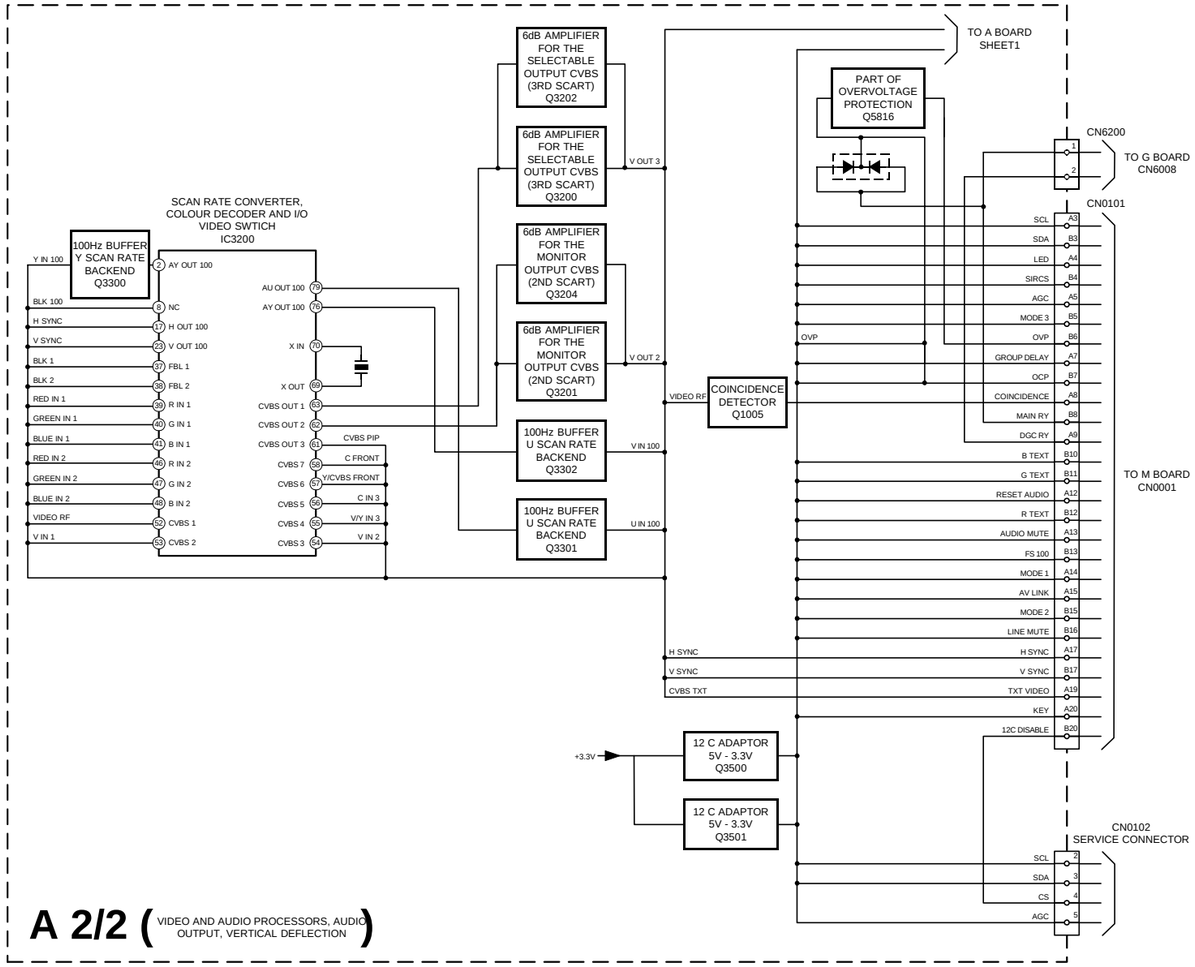

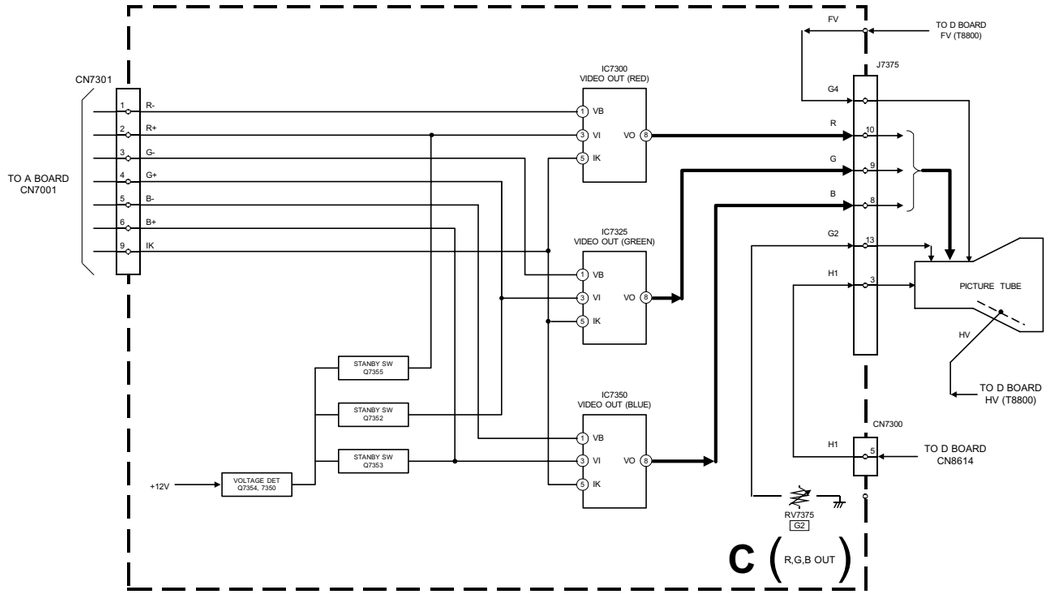

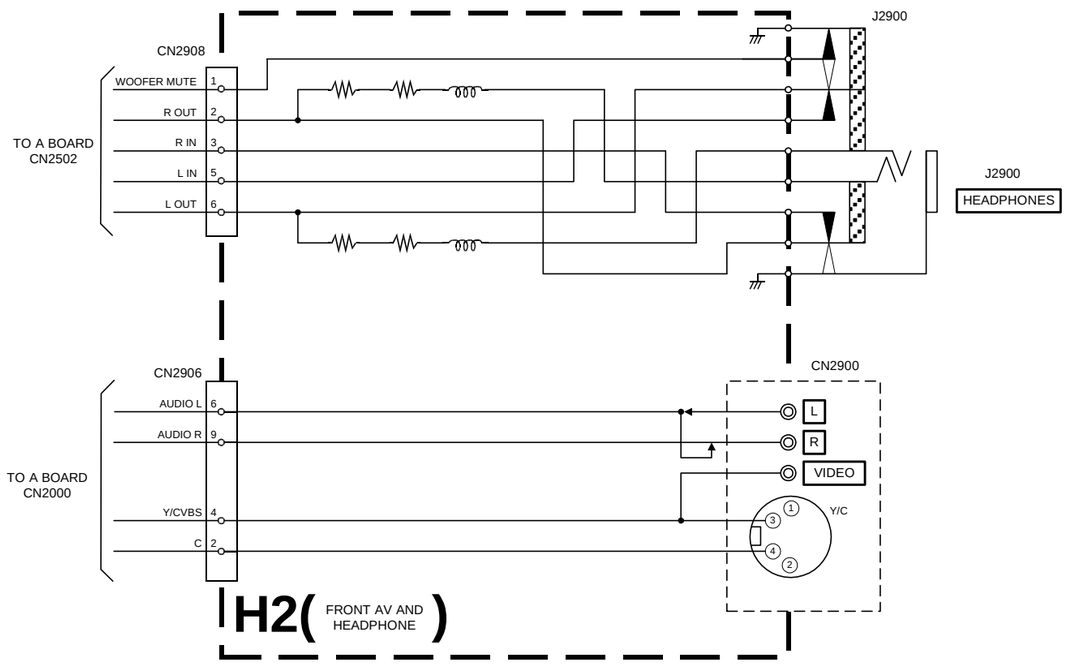

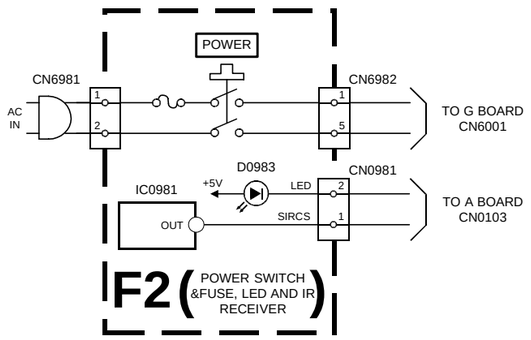

5-1. BLOCK DIAGRAMS (3)

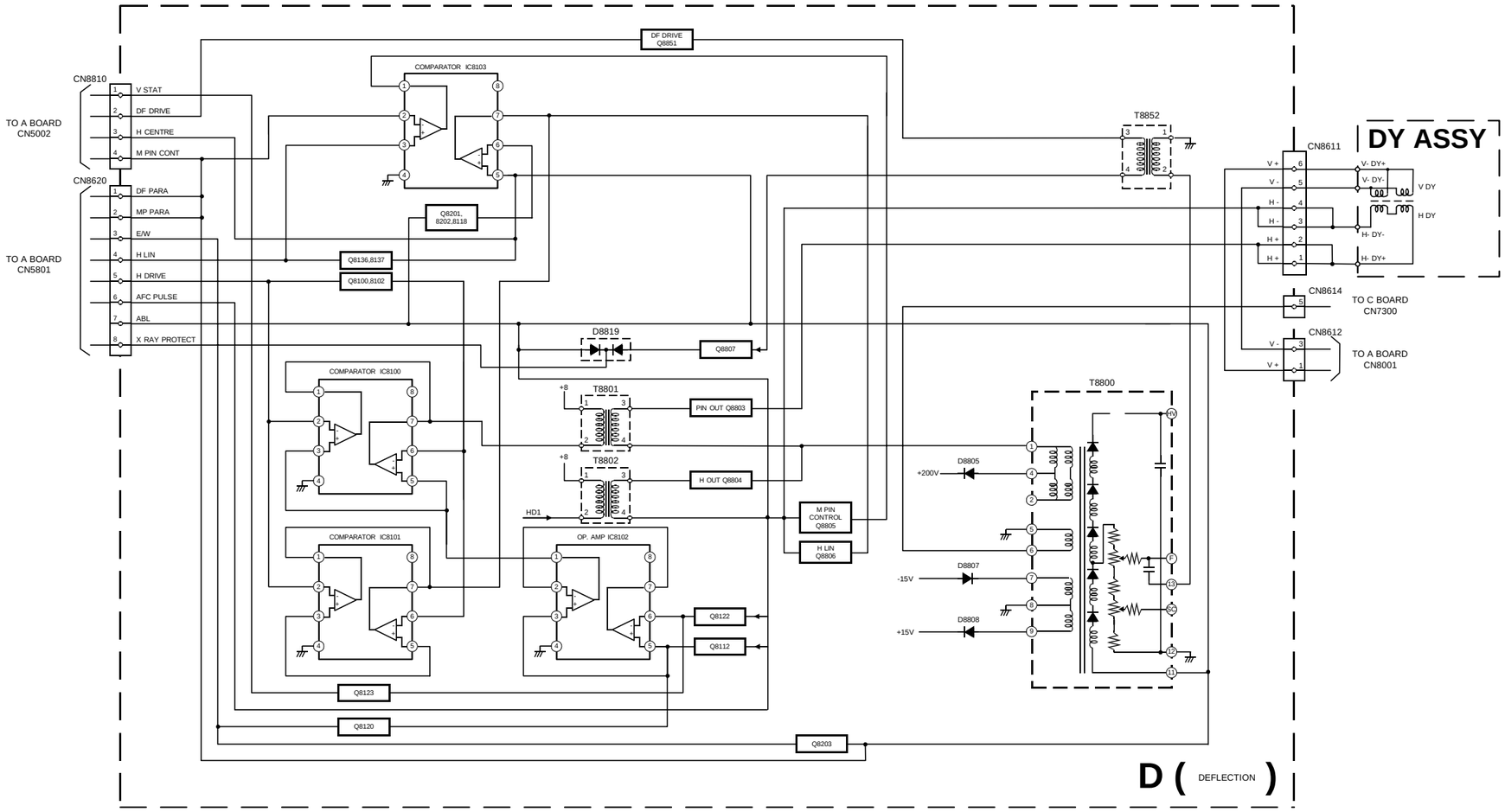

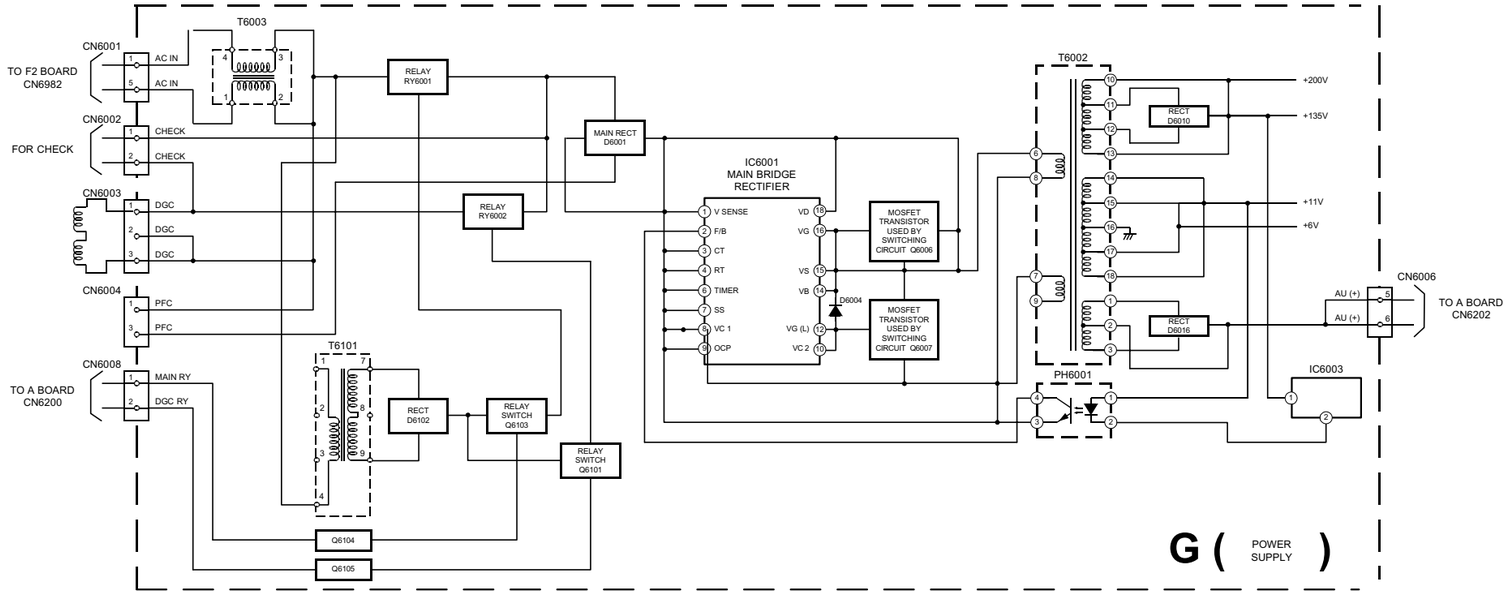

5-1. BLOCK DIAGRAMS (4)

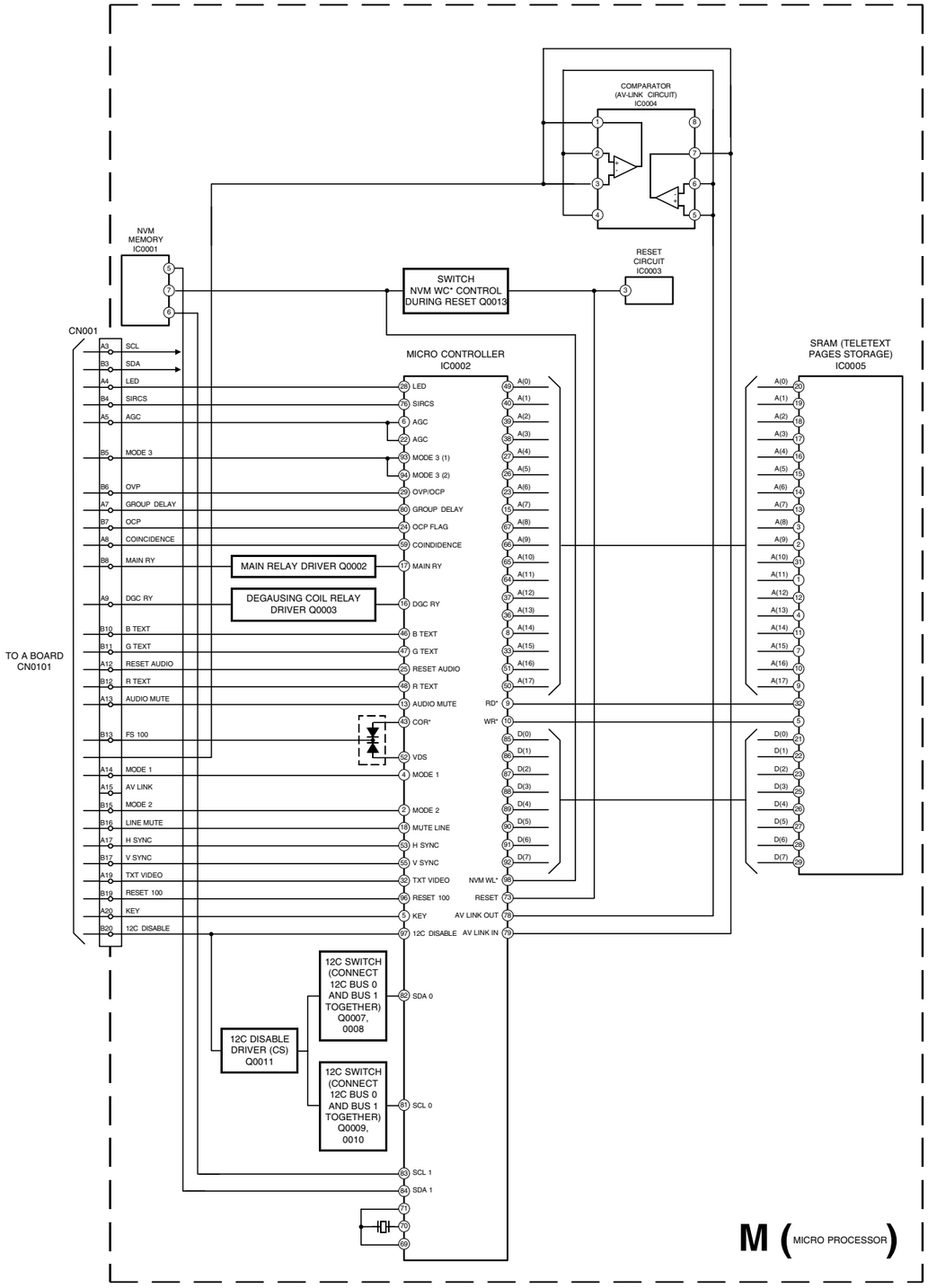

5-2. CIRCUIT BOARD LOCATION

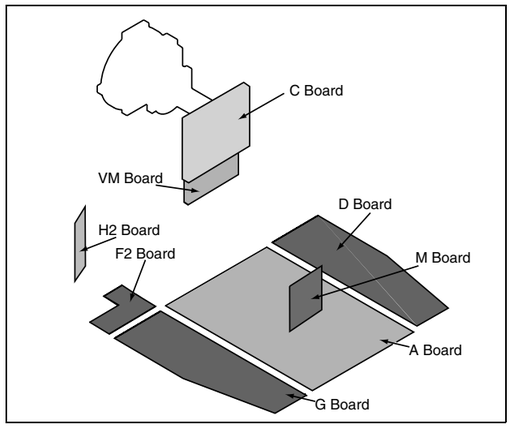

5-3. SCHEMATIC DIAGRAMS AND PRINTED WIRING BOARDS

Note :

- All capacitors are in µF unless otherwise noted.
- pF : µµF 50WV or less are not indicated except for electrolytic types.
- Indication of resistance, which does not have one for rating electrical power, is as follows.

Pitch : 5mm
Electrical power rating : 1/4W

- Chip resistors are 1/10W
- All resistors are in ohms.
  k = 1000 ohms, M = 1000,000 ohms
- : nonflammable resistor.
- : fusible resistor.
- : internal component.
- : panel designation or adjustment for repair.
- All variable and adjustable resistors have characteristic curve B, unless otherwise noted.
- All voltages are in Volts.
- Readings are taken with a 10Mohm digital mutimeter.
- Readings are taken with a color bar input signal.
- Voltage variations may be noted due to normal production tolerences.
- : B + bus.
- : B - bus.
- : RF signal path.
- : earth - ground.
- : earth - chassis.

Reference Information

RESISTOR	**RN**	: METAL FILM
	RC	: SOLID
	FPRD	: NON FLAMMABLE CARBON
	FUSE	: NON FLAMMABLE FUSIBLE
	RS	: NON FLAMMABLE METAL OXIDE
	RB	: NON FLAMMABLE CEMENT
	RW	: NON FLAMMABLE WIREWOUND
		: ADJUSTMENT RESISTOR
COIL	**LF-8L**	: MICRO INDUCTOR
CAPACITOR	**TA**	: TANTALUM
	PS	: STYROL
	PP	: POLYPROPYLENE
	PT	: MYLAR
	MPS	: METALIZED POLYESTER
	MPP	: METALIZED POLYPROPYLENE
	ALB	: BIPOLAR
	ALT	: HIGH TEMPERATURE
	ALR	: HIGH RIPPLE

Note : The components identified by shading and marked ⚠ are critical for safety. Replace only with the part numbers specified in the parts list.

Note : Les composants identifiés par une trame et par une marque ⚠ sont d'une importance critique pour la sécurité. Ne les remplacer que par des pièces de numéro spécifié. specified.

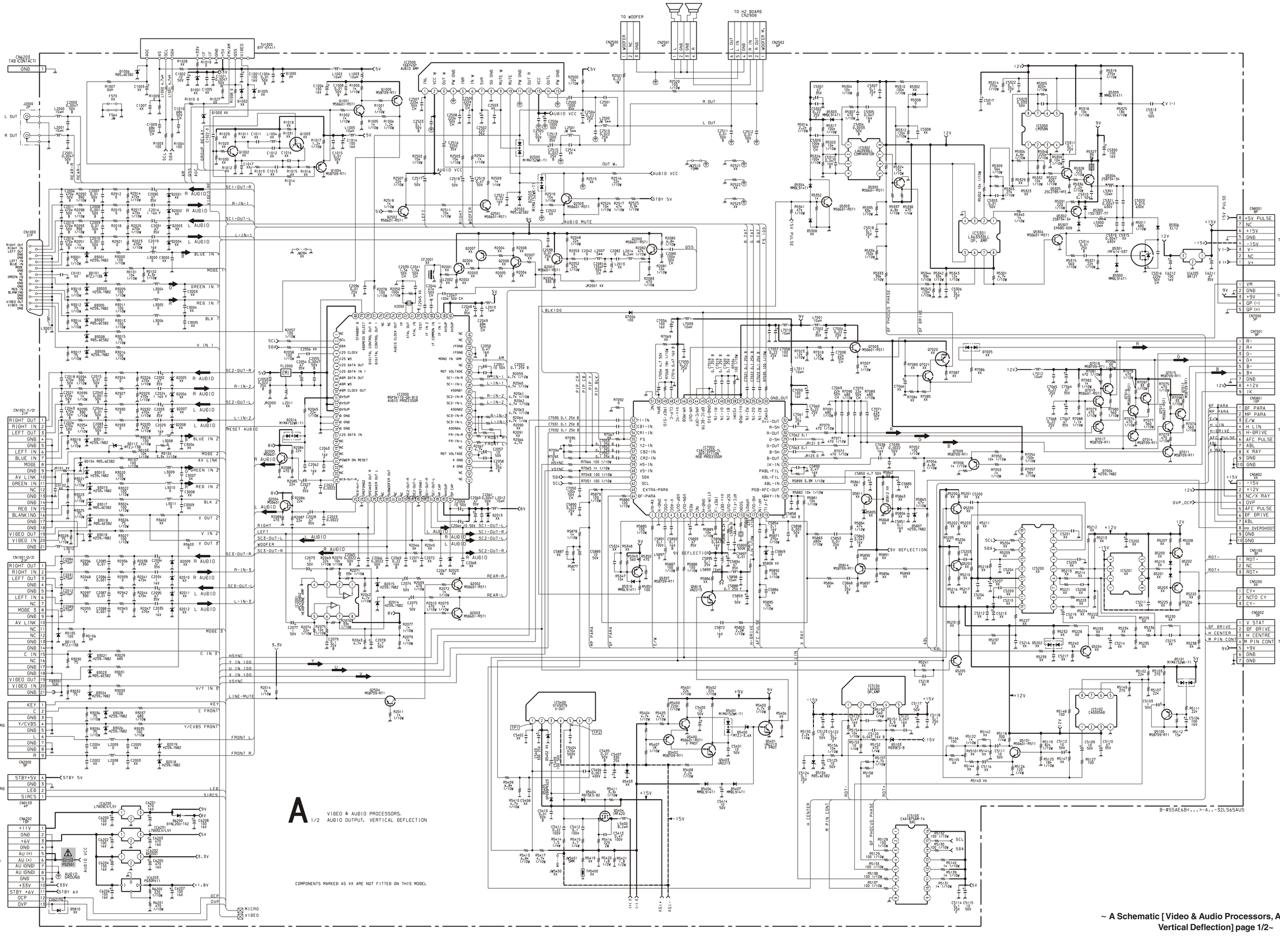

~ A Schematic [Video & Audio Processors, Audio Output, Vertical Deflection] page 1/2~

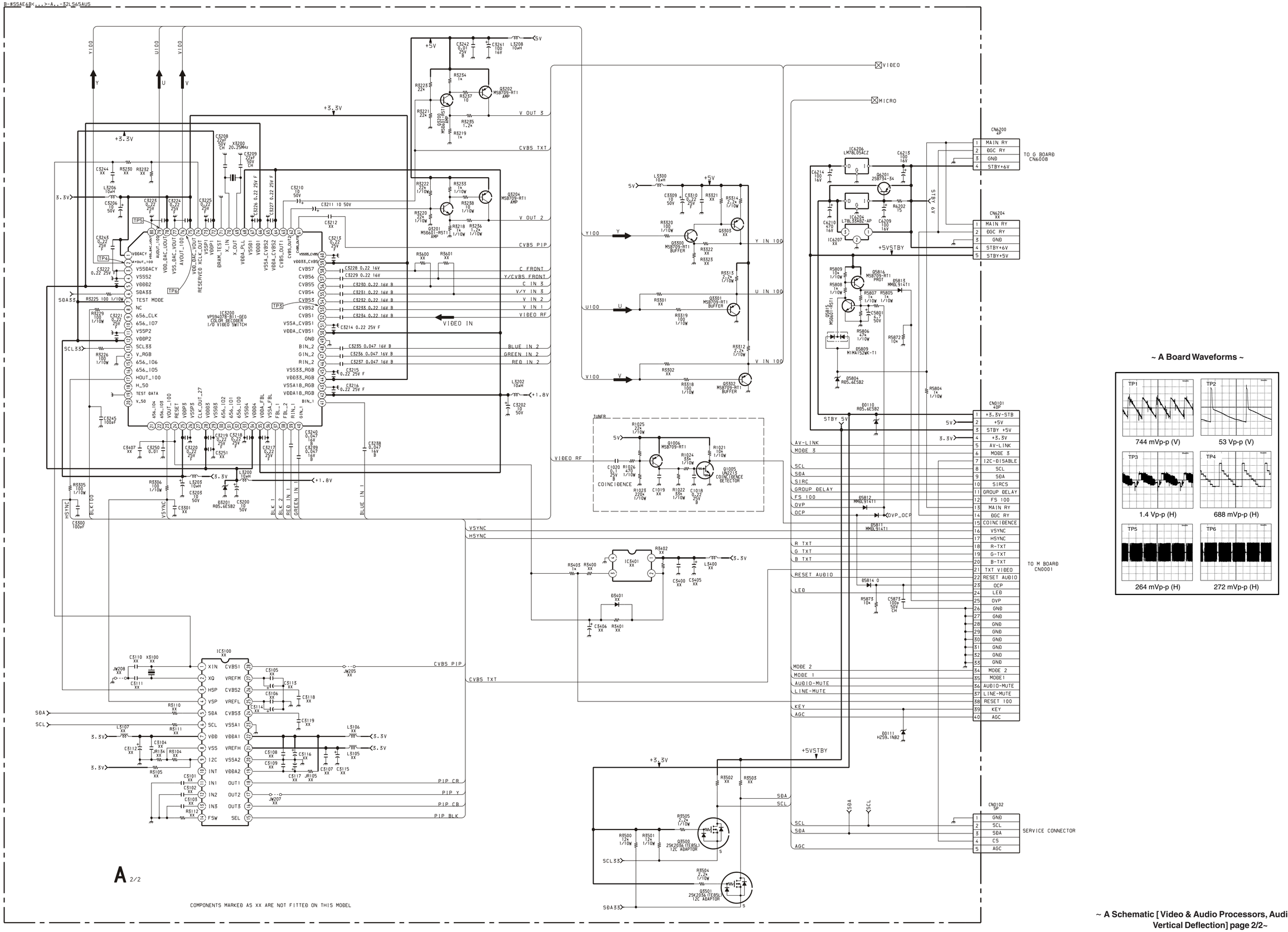

~ A Board Waveforms ~

~ A Schematic [Video & Audio Processors, Audio Output, Vertical Deflection] page 2/2~

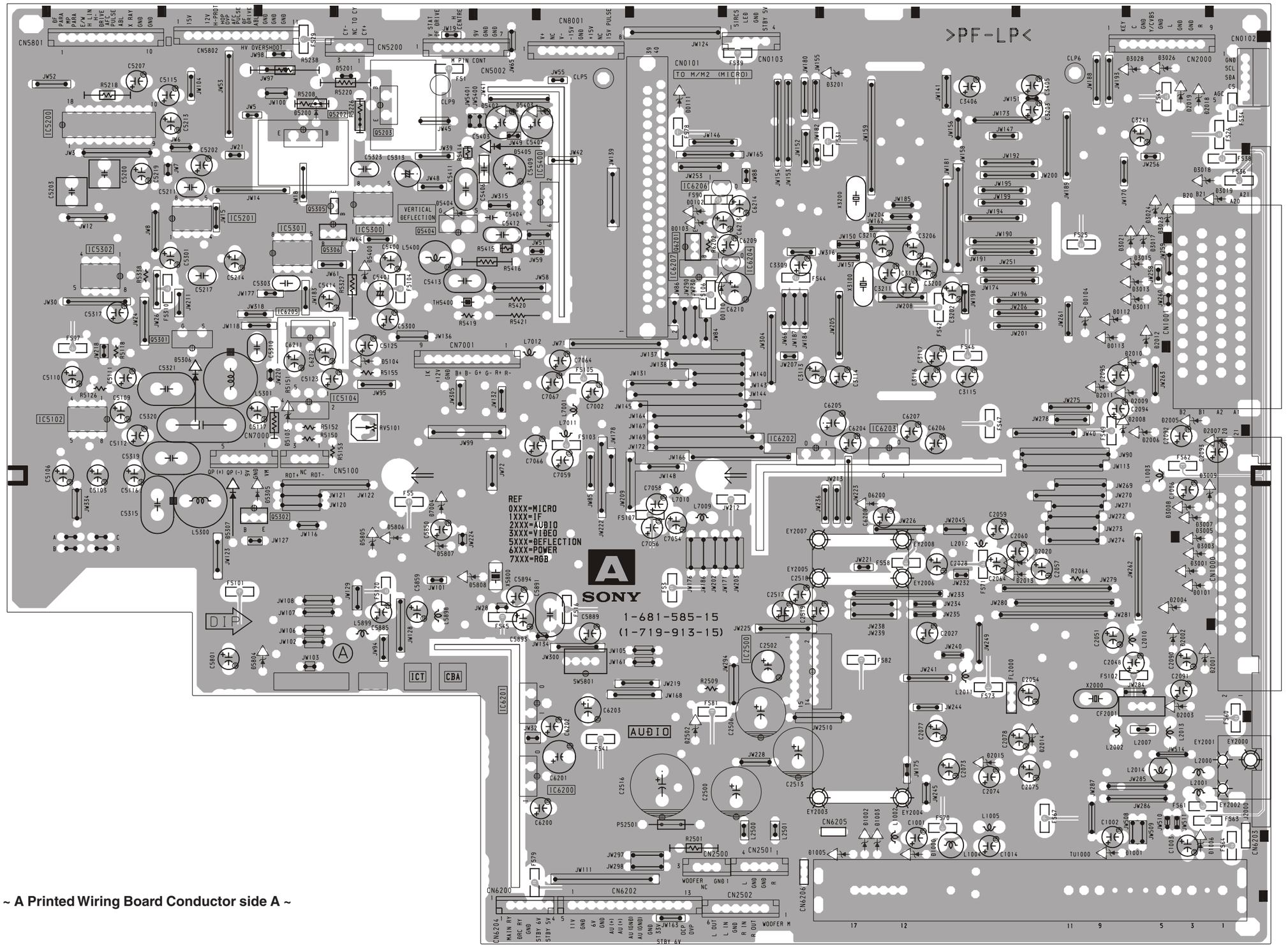

~ A Printed Wiring Board Conductor side A ~

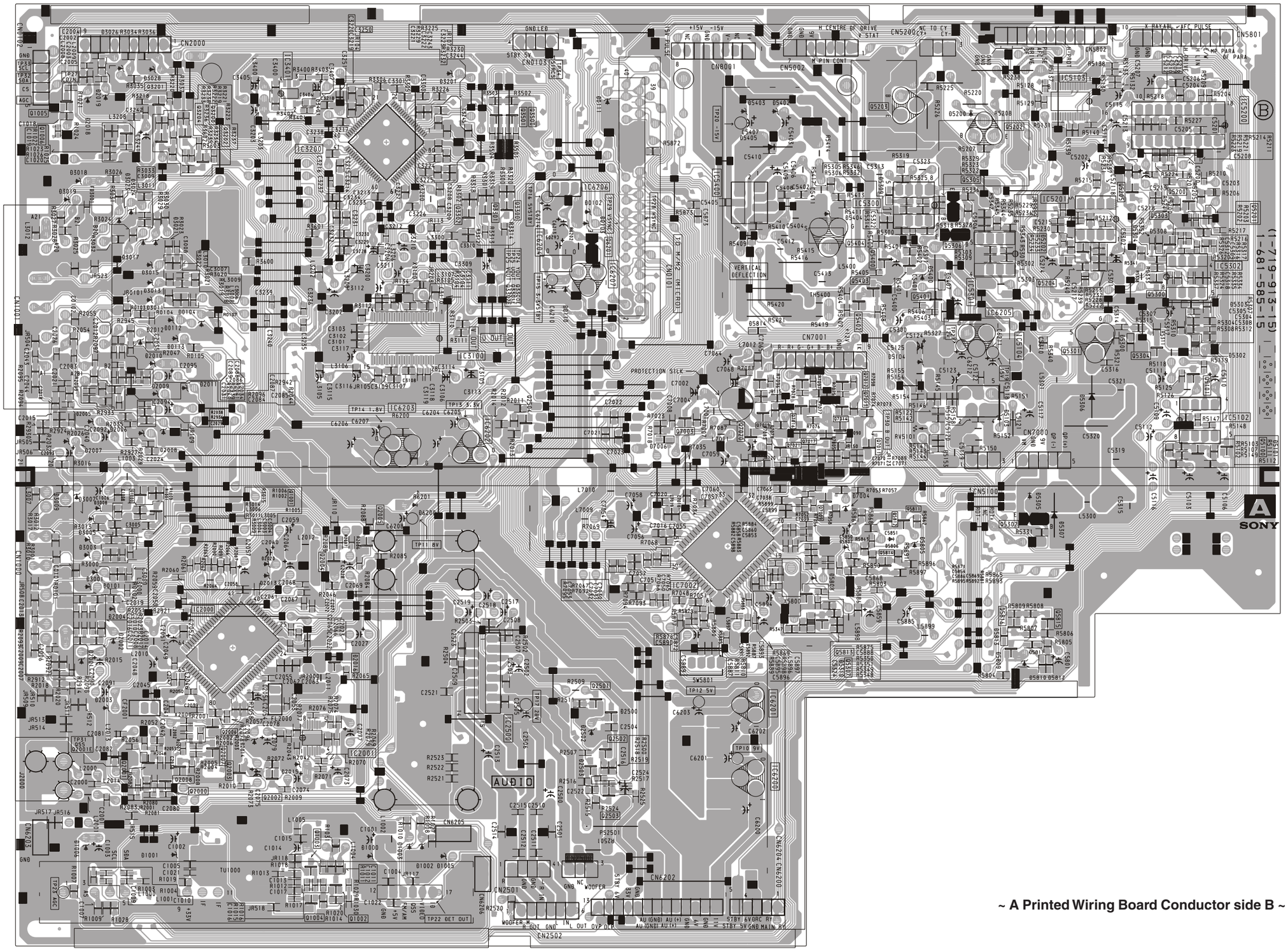

~ A Printed Wiring Board Conductor side B ~

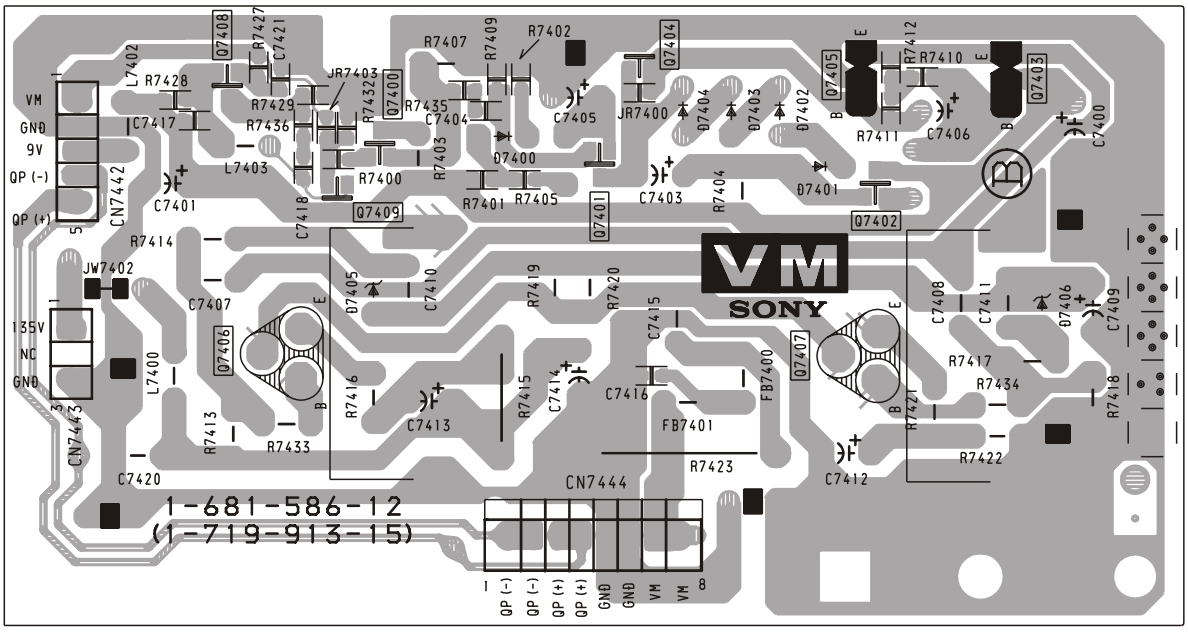

~ VM Board Waveforms ~

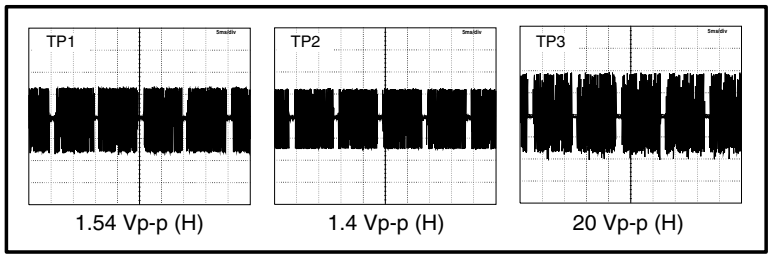

~ VM Board Voltage Table ~

Ref	(e)(s)	(b)(g)	(c)(d)
Q7400	5.0	5.7	8.7
Q7401	0.9	1.5	4.1
Q7402	5.5	6.1	8.9
Q7403	5.1	5.5	8.9
Q7404	4.7	4.1	0
Q7405	5.1	4.7	0
Q7406	134	133.8	68
Q7407	1.1	1.4	68
Q7408	6.3	5.6	2.5
Q7409	5.7	6.3	0.9

~ A Board Location Table (A Side) ~

DIODE		D1006	M - 10	D3003	M - 7	D3015	M - 4	D3026	M - 2	D5305	D - 6	D6200	J - 6	IC5301	D - 4	IC6206	H - 3
D0101	M - 7	D2014	L - 9	D3005	M - 7	D3017	M - 4	D3028	M - 2	D5306	C - 5	D7004	F - 7	IC5302	B - 4	IC6207	H - 4
D0104	L - 5	D2015	K - 9	D3007	M - 7	D3018	N - 3	D3201	J - 2	D5307	D - 7	IC		IC5400	G - 4	TRANSISTOR	
D0110	I - 4	D2018	M - 2	D3008	M - 7	D3019	N - 3	D5103	D - 6	D5400	E - 4	IC5104	D - 6	IC6201	G - 9	Q5202	E- 2
D0111	H - 2	D2019	M - 2	D3009	N - 7	D3021	M - 4	D5104	E - 5	D5404	F - 4	IC5200	B - 3	IC6202	I - 6	Q5301	C - 5
D0112	M - 4	D2502	H - 9	D3011	M - 4	D3023	M - 4	D5200	D - 2	D5405	F - 3	IC5201	C - 4	IC6203	J - 6	Q5306	E - 4
D0113	M - 5	D3001	M - 7	D3013	M - 4	D3024	M - 4	D5201	E - 2	D5807	F - 7	IC5300	E - 4	IC6205	D - 5	Q5404	F - 4

~ A Board Location Table (B Side) ~

DIODE		D2503	G - 9	D3024	B - 3	D5309	J - 3	IC5103	L - 3	TRANSISTOR		Q3201	C - 2	Q5300	M - 4	Q7003	H - 6
D0101	B - 7	D3001	B - 7	D3026	B - 2	D5400	K - 4	IC5104	K - 5	Q1000	C - 6	Q3202	C - 3	Q5301	L - 5	Q7009	I - 7
D0104	C - 5	D3003	B - 7	D3028	C - 2	D5401	J - 4	IC5200	M - 3	Q1001	D - 6	Q3204	C - 3	Q5302	K - 7	Q7011	J - 6
D0110	G - 4	D3005	B - 7	D3201	F - 2	D5404	J - 3	IC5201	L - 4	Q1004	D - 11	Q3300	F - 3	Q5303	M - 4	Q7012	J - 5
D0111	G - 2	D3007	B - 6	D5103	L - 6	D5405	I - 3	IC5300	J - 3	Q1005	B - 2	Q3301	F - 3	Q5304	M - 5	Q7013	J - 6
D0112	C - 5	D3008	B - 6	D5104	J - 5	D5809	K - 8	IC5301	K - 4	Q1006	B - 3	Q3302	F - 3	Q5305	K - 3	Q7014	J - 6
D0113	C - 5	D3009	B - 6	D5200	K - 2	D5811	L - 8	IC5302	M - 4	Q2000	C - 9	Q3500	F - 3	Q5306	K - 4	Q7015	I - 5
D1006	B - 10	D3011	C - 4	D5202	L - 4	D5812	L - 8	IC5400	I - 3	Q2002	D - 9	Q3501	F - 3	Q5400	J - 4	Q7016	I - 6
D2014	C - 9	D3013	C - 4	D5300	L - 5	D6200	E - 7	IC6200	I - 9	Q2003	D - 9	Q5101	M - 5	Q5401	J - 4	Q7017	I - 6
D2015	D - 9	D3015	C - 4	D5303	N - 4	IC		IC6201	I - 8	Q2004	E - 7	Q5200	M - 4	Q5402	J - 5	Q7018	I - 5
D2016	E - 8	D3017	B - 4	D5304	M - 4	IC2000	C - 8	IC6202	F - 6	Q2005	E - 7	Q5201	N - 4	Q5403	J - 4	Q7019	I - 6
D2018	B - 2	D3018	B - 3	D5305	L - 6	IC2001	D - 9	IC6203	E - 6	Q2501	G - 8	Q5202	K - 3	Q5404	J - 4		
D2019	B - 2	D3019	B - 3	D5306	L - 5	IC2500	F - 8	IC6205	K - 5	Q2502	G - 9	Q5203	J - 2	Q5813	J - 8		
D2500	G - 9	D3021	C - 4	D5307	L - 7	IC3100	E - 5	IC6206	G - 3	Q2503	G - 9	Q5204	L - 4	Q5815	L - 8		
D2502	G - 9	D3023	B - 3	D5308	M - 4	IC3200	E - 3	IC6207	G - 4	Q3200	C - 3	Q5205	M - 3	Q5816	L - 8		

~ A Board Semiconductor Voltage Table ~

Ref	(s)	(g)	(d)	Ref	(e)	(b)	(c)	Ref	(e)	(b)	(c)	Ref	(e)	(b)	(c)	Ref	(e)	(b)	(c)	Ref	(e)	(b)	(c)
Q3500	2.7	3.3	3.9	Q2002	0	0	4	Q3204	5	4.4	3.4	Q5205	1.9	1.2	0	Q5813	0	7.9	0	Q7015	11.6	10.9	8.8
Q3501	2.7	3.3	4	Q2003	0	0	4	Q3300	0.7	1.3	5	Q5300	0	0.4	2.2	Q5814	0	0	0	Q7016	6	6.6	10.9
Q5301	0	5.1	51.2	Q2004	3.3	3.9	8.3	Q3301	1.9	1.2	0	Q5301	5.1	0	51.2	Q5815	0	0	5	Q7017	2.7	2	0
Q5404	0	0	0.5	Q2005	3.3	3.9	8.3	Q3302	1.9	1.2	0	Q5302	8.9	5.7	0	Q5816	5	5	0	Q7018	11.6	10.9	8.6
Ref	**(e)**	**(b)**	**(c)**	Q2501	0	0	15.2	Q3500	3.3	2.7	3.9	Q5304	0	0.4	5.6	Q7003	5.6	6.2	8.8	Q7019	6	6.6	10.9
Q1001	3.2	3.9	8.3	Q2502	0	0.7	0	Q3501	3.3	2.7	4	Q3400	0	0	0.1	Q7009	3.2	7	0.1	Q7020	8.9	8.9	0
Q1004	1.9	1.3	0	Q2503	0.6	0.6	0.5	Q5101	0	0.4	6.4	Q5401	0	0	7.9	Q7011	2.5	1.9	0	Q7021	2.7	2.7	8.9
Q1005	0	0.5	5	Q3200	1.9	2.5	4.4	Q5201	2.8	3.4	7.9	Q5402	0	0	-11.3	Q7012	11.6	10.9	8.7				
Q1006	5	4.7	1	Q3201	1.9	2.5	4.4	Q5202	0.2	0.8	11.7	Q5403	-13.5	-11.2	-8.3	Q7013	6	6.6	10.9				
Q2000	4.2	4.8	8.3	Q3202	5	4.4	3.4	Q5203	0.2	0.8	11.7	Q5404	0	0	0.5	Q7014	2.5	1.8	0				

~ A Board IC Voltage Table ~

Ref No	Pin No	Volts (V)	Ref No	Pin No	Volts (V)	Ref No	Pin No	Volts (V)	Ref No	Pin No	Volts (V)
IC5103	1	3.3	IC5301	5	6.5	IC7002	10	0.4	IC7002	38	0
	2	3.3		6	7.1		11	1.9		39	4.8
	3	1.9		7	0.4		12	0.4		40	4.8
	4	2.6		8	12		13	0.9		41	4.8
	5	2.5	IC5302	1	0		14	5		42	0
	6	1.8		2	5.8		15	2.5		43	0
	7	2		3	6.3		16	0		44	0
	8	0		4	0		17	3		45	6.3
	9	3.1		5	6.6		18	2.7		46	8.9
	10	3		6	6.5		19	3.9		47	8.9
	11	5		7	0.4		20	0		48	6
	12	5		8	12		21	6.1		49	2.5
	13	5	IC5400	1	1.4		22	2.7		50	4.1
	14	0		2	13.2		23	8.8		51	0
	15	0		3	-12.5		24	0		52	6
	16	5		4	-15.4		25	4.3		53	5.8
IC5300	1	6		5	-0.4		26	3.2		54	5.8
	2	6		6	13.7		27	5.2		55	0.4
	3	6		7	1.4		28	0.3		56	5.8
	4	0	IC7002	1	3.6		29	4.9		57	5.8
	5	6		2	0		30	3.4		58	5.8
	6	6		3	4.4		31	5.6		59	0.3
	7	6		4	4.8		32	8.9		60	0
	8	12		5	3.5		33	0		61	0
IC5301	1	1.7		6	3.4		34	4.7		62	2.9
	2	8.5		7	7.6		35	4.7		63	3.7
	3	6.5		8	0		36	4.7			
	4	0		9	0		37	8.9			

~ F2 Board Schematic Diagram [Power Switch & Fuse. LED & IR Receiver] ~

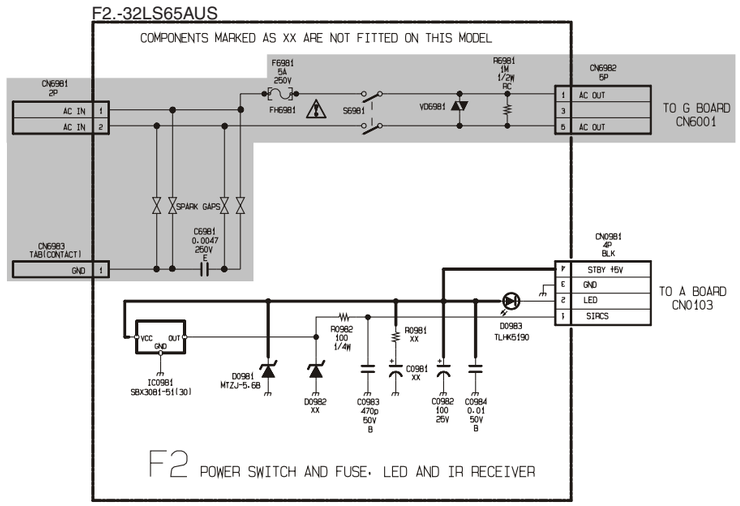

~ H2 Board Schematic Diagram [Front AV & Headphone] ~

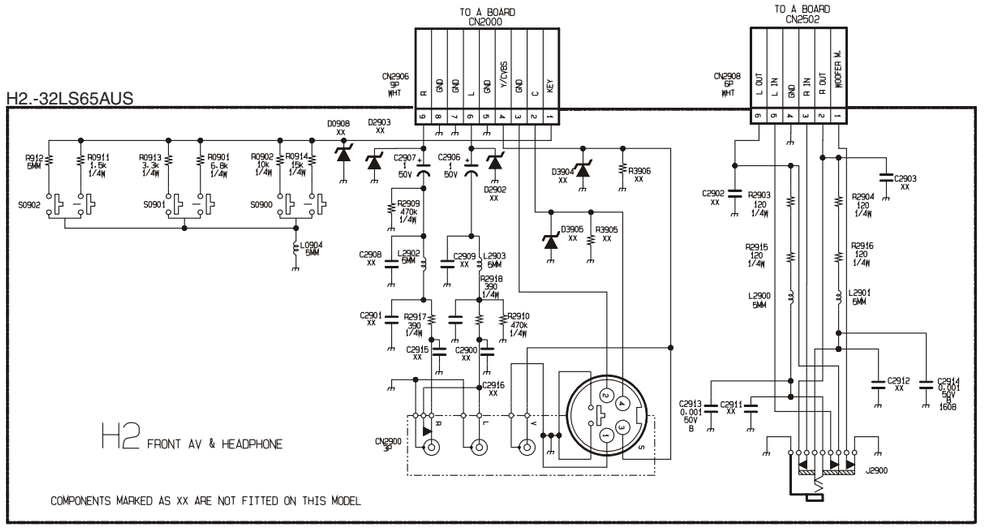

B-#SSAE6B<...>-VM..-32LS65AUS

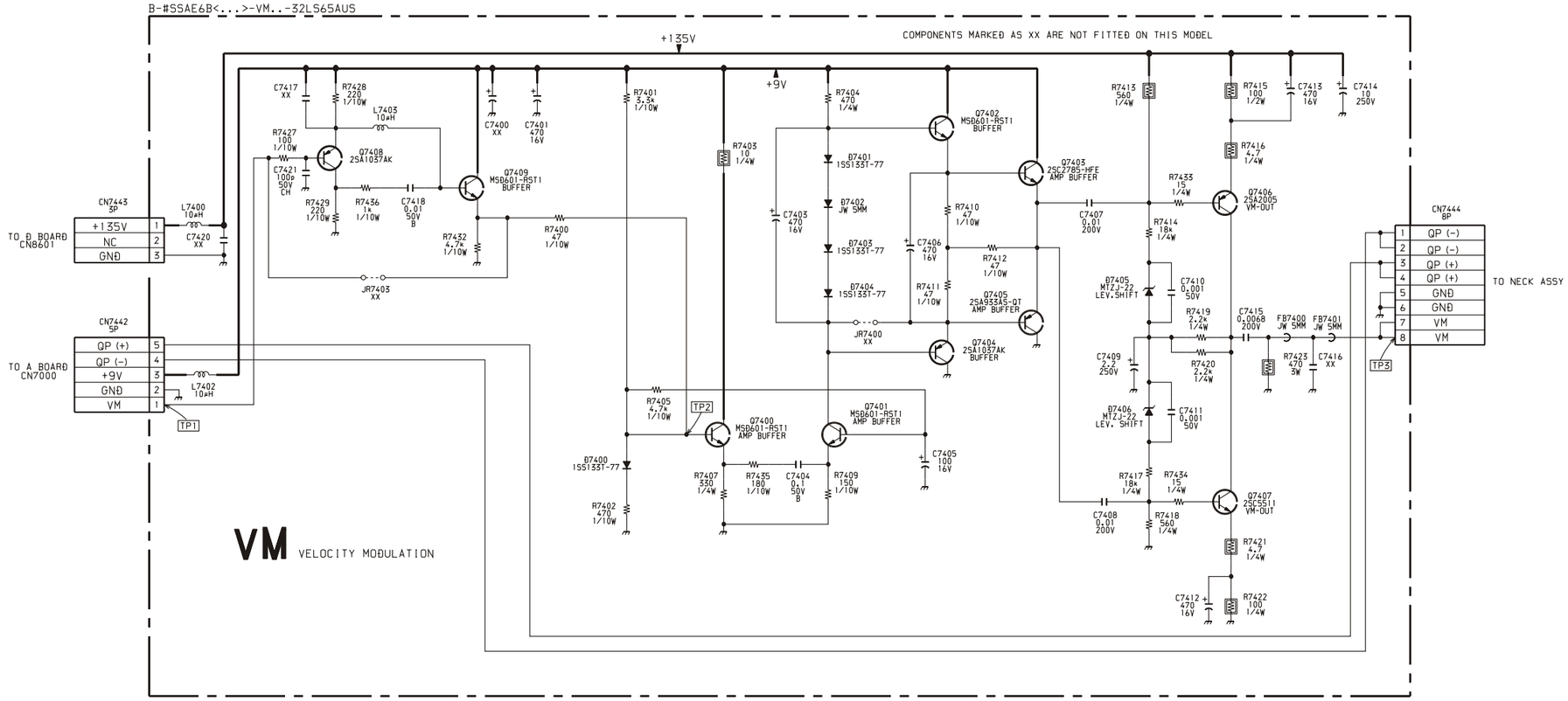

~ VM Board Schematic Diagram [Velocity Modulation] ~

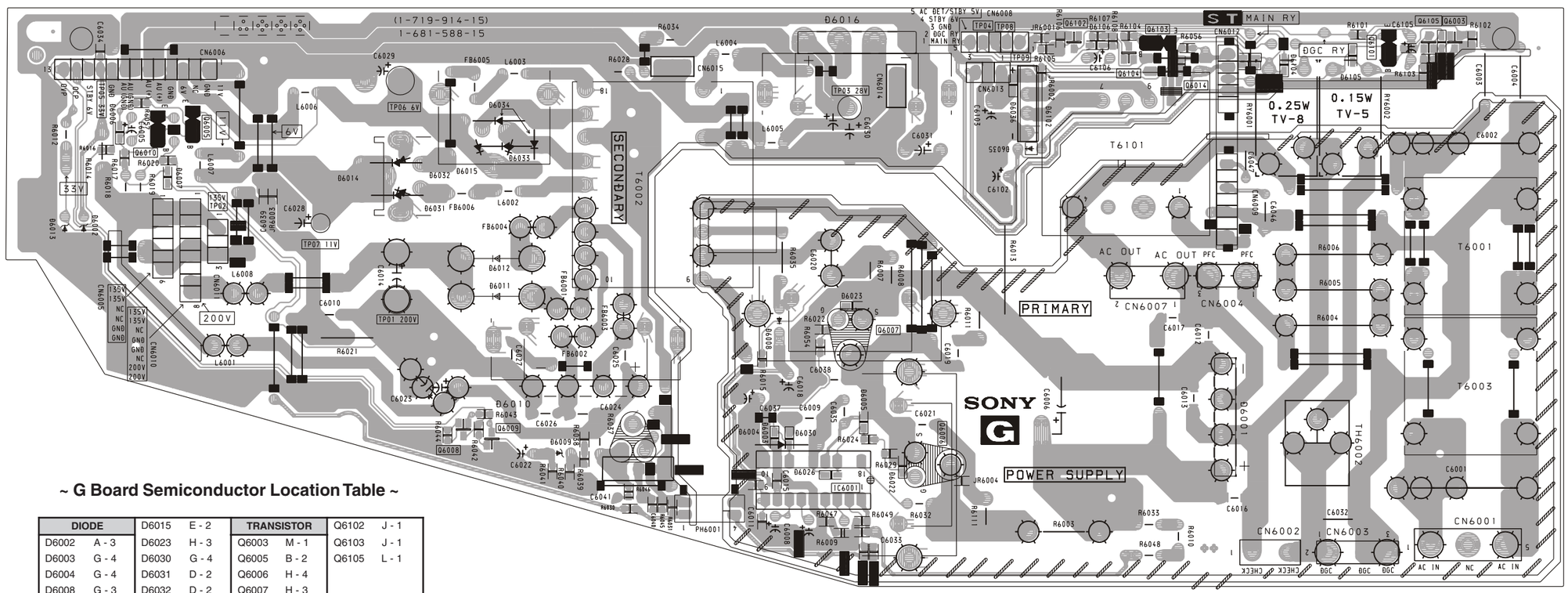

~ G Printed Wiring Board Conductor side ~

~ G Board Semiconductor Location Table ~

DIODE		D6015	E - 2	TRANSISTOR		Q6102	J - 1
D6002	A - 3	D6023	H - 3	Q6003	M - 1	Q6103	J - 1
D6003	G - 4	D6030	G - 4	Q6005	B - 2	Q6105	L - 1
D6004	G - 4	D6031	D - 2	Q6006	H - 4		
D6008	G - 3	D6032	D - 2	Q6007	H - 3		
D6009	E - 4	D6033	E - 2	Q6008	D - 4		
D6010	E - 4	D6034	E - 2	Q6009	E - 4		
D6011	E - 3	IC		Q6010	B - 2		
D6012	E - 3	IC6001	G - 5	Q6014	J - 2		
D6013	A - 3			Q6101	L - 1		

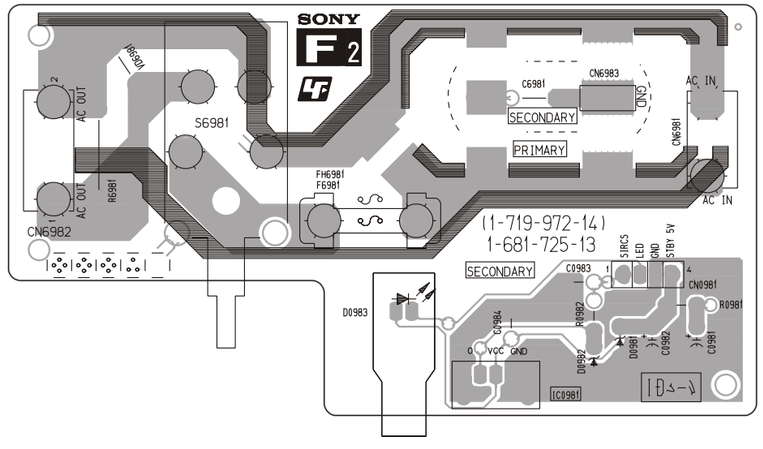

~ F2 Printed Wiring Board Conductor side ~

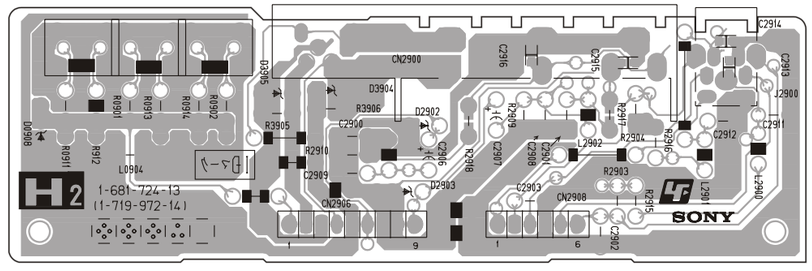

~ H2 Printed Wiring Board Conductor side ~

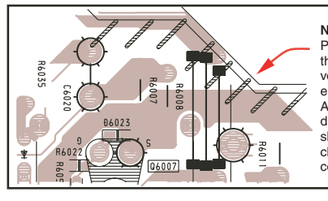

Note :
Portions of the circuit contained within the marked areas as shown have high voltages present. Use care to prevent electric shock during inspection or repair. An Isolation Transformer must be used during any Service work to avoid possible shock hazard due to live chassis. The chassis of this receiver is directly connected to the power line.

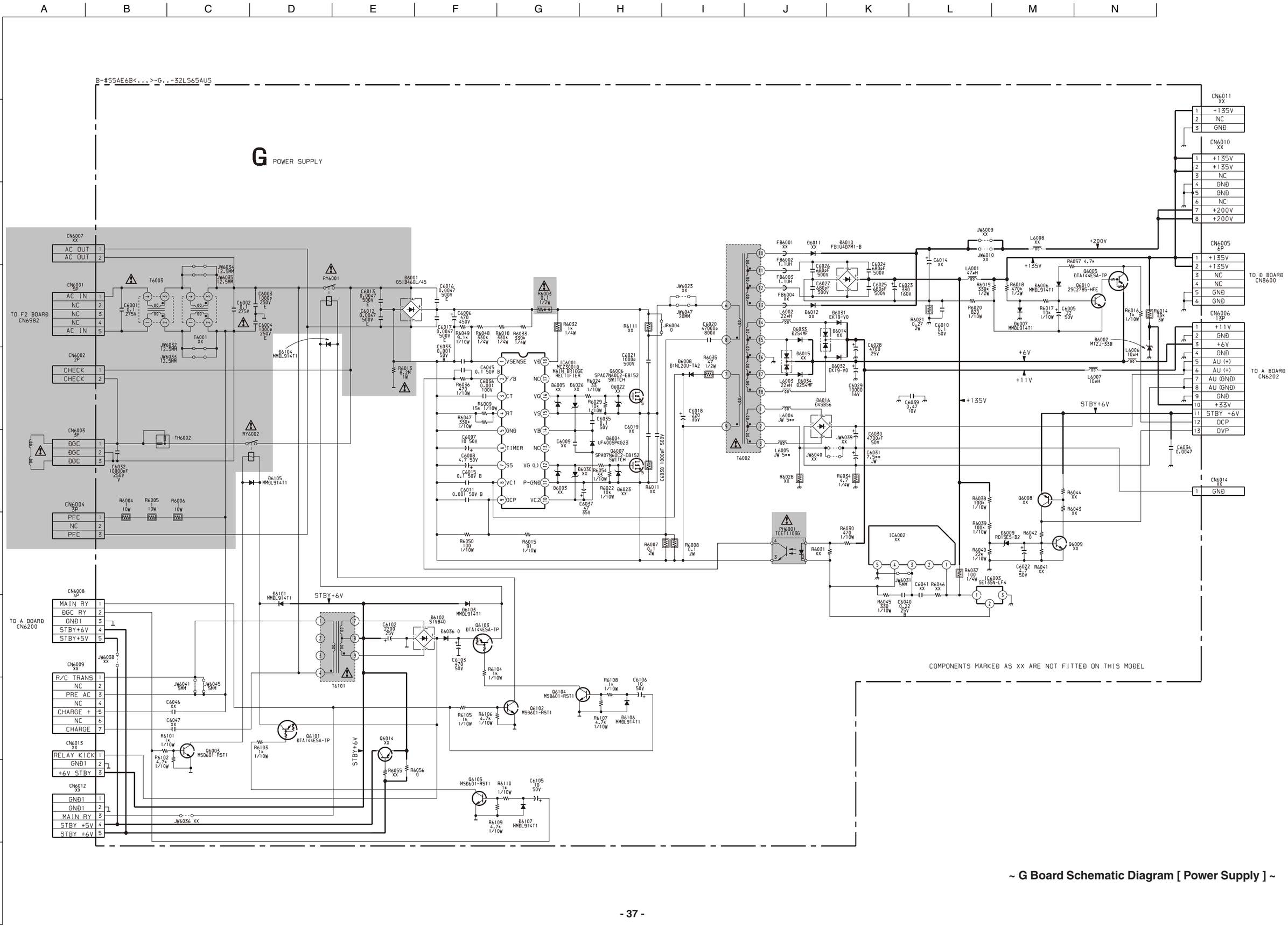
G POWER SUPPLY
B-#SSAE6B<...>-G..-32LS65AUS
CN6007 AC OUT 1 AC OUT 2
CN6001 AC IN 1 NC 2 NC 3 NC 4 AC IN 5
TO F2 BOARD CN6982
CN6002 CHECK 1 CHECK 2
CN6003 ĐGC 1 ĐGC 2 ĐGC 3
CN6004 PFC 1 NC 2 PFC 3
CN6008 MAIN RY 1 ĐGC RY 2 GNĐ1 3 STBY+6V 4 STBY+5V 5
TO A BOARD CN6200
CN6009 R/C TRANS 1 NC 2 PRE AC 3 NC 4 CHARGE + 5 NC 6 CHARGE 7
CN6013 RELAY KICK 1 GNĐ1 2 +6V STBY 3
CN6012 GNĐ1 1 GNĐ1 2 MAIN RY 3 STBY +5V 4 STBY +6V 5
T6003
T6001
T6101
TH6002
RY6001
RY6002
IC6001 NCZ5001B MAIN BRIDGE RECTIFIER
Q6006 SPA07N60C2-E8152 SWITCH
Q6007 SPA07N60C2-E8152 SWITCH
D6004 UF4005PK023
D6008 DINL20U-TA2
T6002
PH6001 TCET1103G
IC6002
IC6003 SE135N-LF4
Q6101 DTA144ESA-TP
Q6102 MSB601-RST1
Q6103 DTA144ESA-TP
Q6104 MSB601-RST1
Q6105 MSB601-RST1
Q6003 MSB601-RST1
CN6011 XX 1 +135V 2 NC 3 GNĐ
CN6010 XX 1 +135V 2 +135V 3 NC 4 GNĐ 5 GNĐ 6 NC 7 +200V 8 +200V
CN6005 6P 1 +135V 2 +135V 3 NC 4 NC 5 GNĐ 6 GNĐ
TO Đ BOARD CN8600
CN6006 13P 1 +11V 2 GNĐ 3 +6V 4 GNĐ 5 AU (+) 6 AU (+) 7 AU (GNĐ) 8 AU (GNĐ) 9 GNĐ 10 +33V 11 STBY +6V 12 OCP 13 OVP
TO A BOARD CN6202
CN6014 XX 1 GNĐ
+200V
+135V
+11V
+6V
STBY+6V
COMPONENTS MARKED AS XX ARE NOT FITTED ON THIS MODEL

~ G Board Schematic Diagram [Power Supply] ~

C.-32LS65AUS

C R.G.B OUT

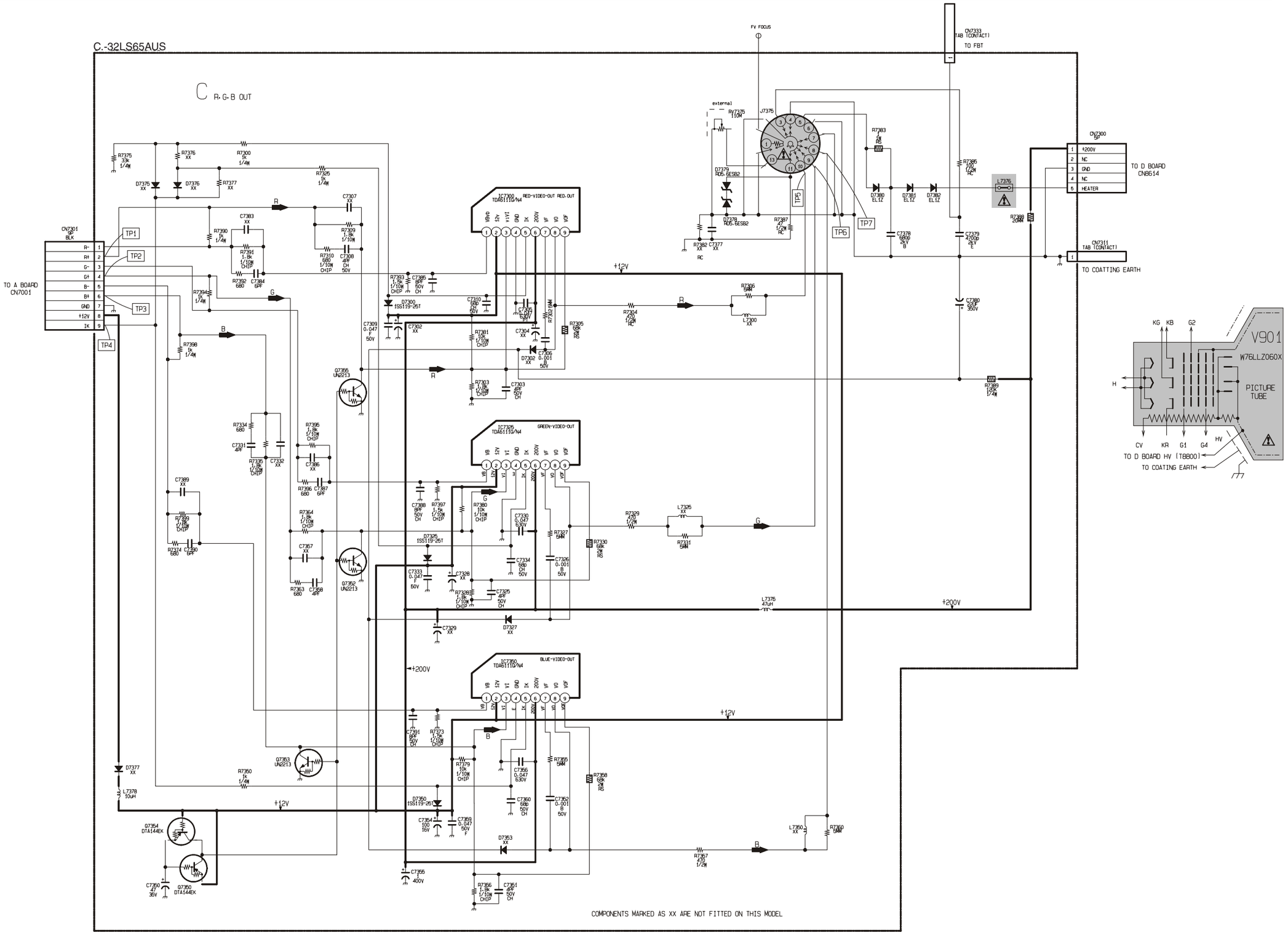

~ C Board Schematic Diagram [R-G-B Out] ~

~ C Printed Wiring Board Conductor side ~

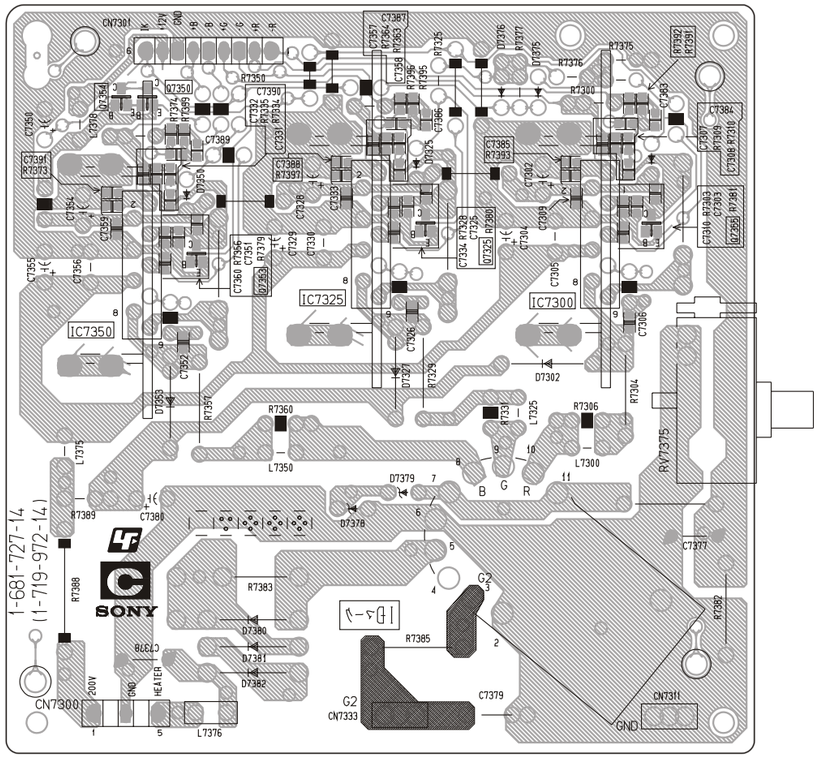

~ C Board Waveforms ~

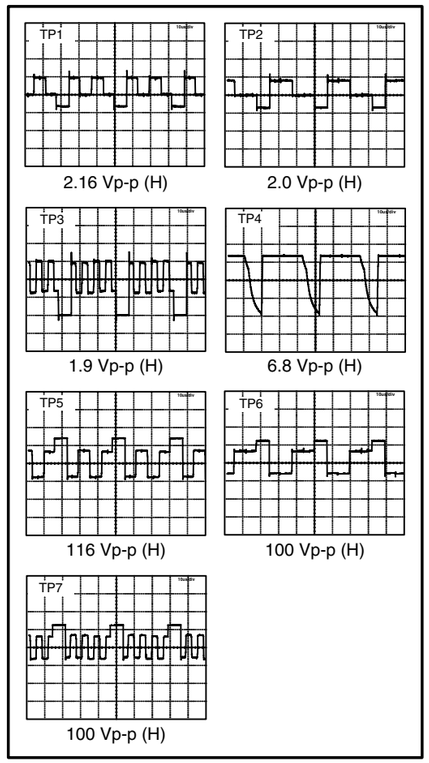

~ C Board Semiconductor Voltage Table ~

Ref	(e)	(b)	(c)
Q7350	12	11.98	0
Q7352	0	0	3.8
Q7353	0	0	3.8
Q7354	11.98	12	0
Q7355	0	0	3.8

~ C Board IC Voltage Table ~

IC Voltage Table		
Ref No	Pin No	Voltage (V)
IC7300	1	3.9
	3	3.8
	5	7.5
	6	200
	7	140
	8	153
	9	140
IC7325	1	3.9
	3	3.8
	5	7.7
	6	200
	7	140
	8	153
	9	140
IC7350	1	3.9
	3	3.8
	5	7.5
	6	200
	7	139
	8	148
	9	138

~ M Printed Wiring Board Conductor side A ~

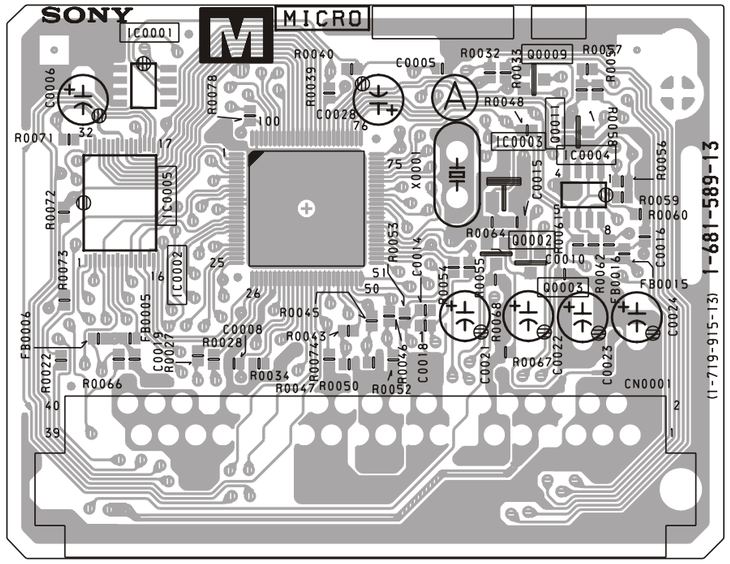

~ M Printed Wiring Board Conductor side B ~

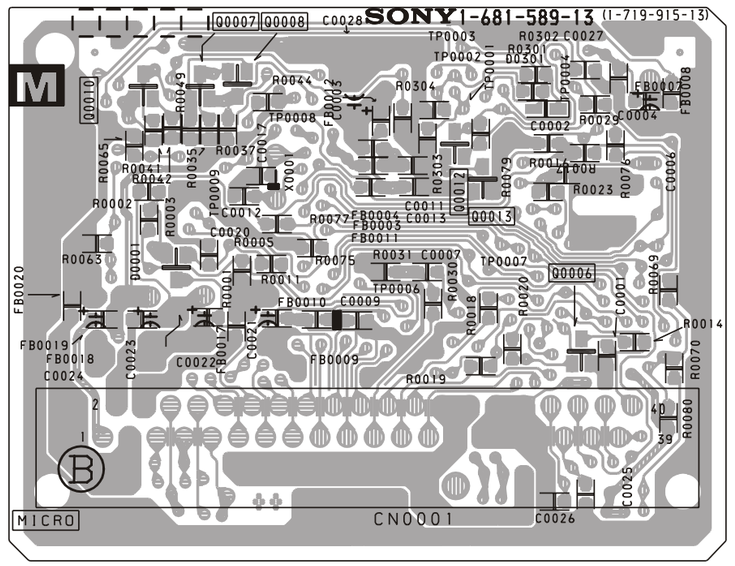

B-#SSAE6B<...>-M..-32LS65AUS

M MICRO PROCESSOR

COMPONENTS MARKED AS XX ARE NOT FITTED ON THIS MODEL

IC0002
SAA5665HL/M1B/
0710
MICRO CONTROLLER

IC0001
M24C16-MN6T

IC0003
PST5731MT

IC0004 LM3930T

IC0005
K6F2008V2A

CN0001
40P

+3.3V-STB	1
+5V	2
STBY+5V	3
+3.3V	4
AV-LINK	5
MODE 3	6
I2C-DISABLE	7
SCL	8
SDA	9
SIRCS	10
GROUP DELAY	11
FS 100	12
MAIN RY	13
BGC RY	14
COINCIDENCE	15
VSYNC	16
HSYNC	17
R-TXT	18
G-TXT	19
B-TXT	20
TXT VIDEO	21
RESET AUDIO	22
OCP	23
LED	24
OVP	25
GND	26
GND	27
GND	28
GND	29
GND	30
GND	31
GND	32
GND	33
MODE2	34
MODE1	35
AUDIO MUTE	36
LINE-MUTE	37
RESET 100	38
KEY	39
AGC	40

TO A BOARD
CN0101

~ M Board Schematic Diagram [Micro• Processor] ~

~ D Printed Wiring Board Conductor side ~

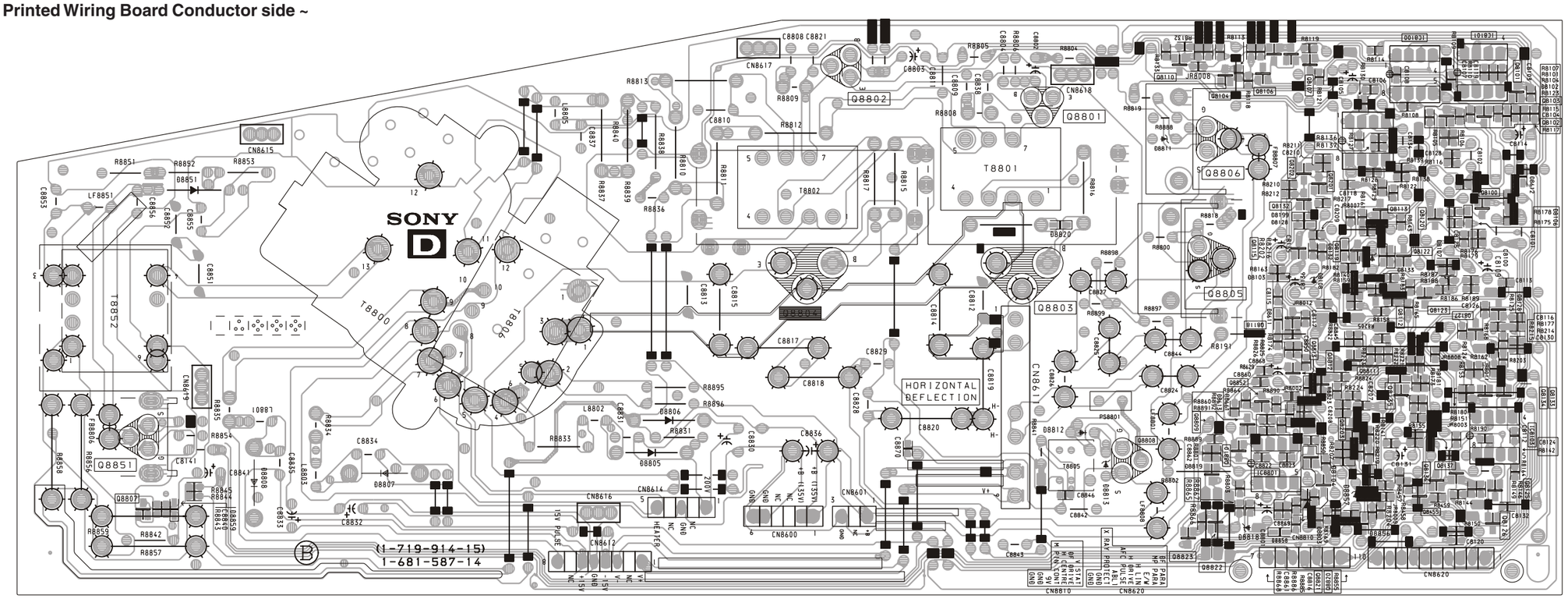

~ D Board Waveforms ~

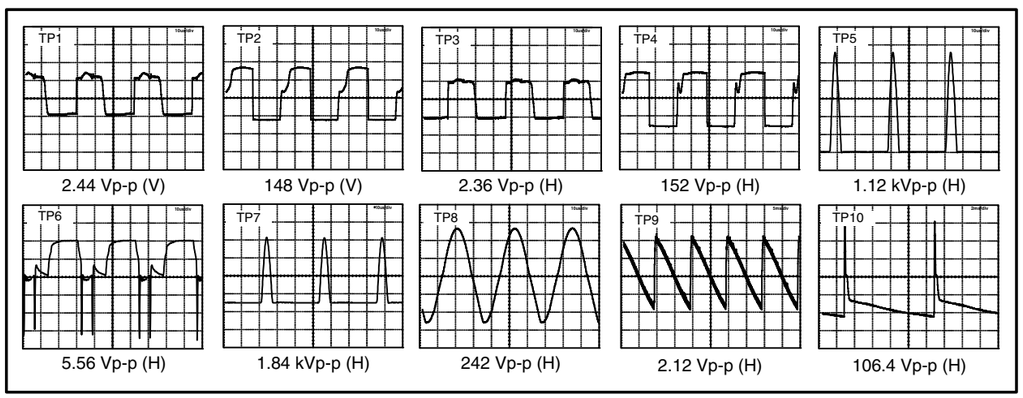

~ D Board IC Voltage Table ~

IC Voltage Table		
Ref No	Pin No	Voltage (V)
IC8100	1	0.3
	2	4.3
	3	4.1
	5	4.1
	6	3.0
	7	0.4
IC8101	1	0.3
	2	4.3
	3	4.4
	5	4.4
	6	3.0
	7	0.4
IC8102	1	4.1
	2	0.4
	3	0.4
	5	0.4
	6	0.4
	7	0.4
IC8103	1	2.5
	2	2.1
	3	1.7
	5	1.6
	6	1.0
	7	1.1

~ D Board Semiconductor Voltage Table ~

Ref	(e)(s)	(b)(g)	(c)(d)	Ref	(e)(s)	(b)(g)	(c)(d)	Ref	(e)(s)	(b)(g)	(c)(d)	Ref	(e)(s)	(b)(g)	(c)(d)
Q8100	0	0.6	3.6	Q8110	2.4	3.1	0	Q8128	3.4	1.5	8.9	Q8801	0	0.4	64.7
Q8101	0	0.6	4.3	Q8113	0.3	0.2	8.9	Q8132	0	0	3.4	Q8802	0	0.4	73.2
Q8102	0	0.3	4.3	Q8115	8.6	8.9	0	Q8135	2.6	3.2	8.9	Q8807	0	6.3	0
Q8103	4.0	0	8.9	Q8118	0	0	5.0	Q8136	2.5	1.8	0	Q8818	0	0	5.0
Q8104	0	0.4	3.1	Q8119	0.7	1.4	0	Q8137	1.8	2.5	8.9	Q8822	5.5	4.9	0
Q8105	0	0.4	3.2	Q8120	0.7	2.3	0	Q8201	0	0.6	3.9	Q8823	8.9	8.5	0
Q8106	0	0.3	4.3	Q8122	0.5	1.4	0	Q8202	0	0.8	3.4	Q8805	0	2.5	33
Q8107	0	0.3	4.2	Q8123	0.5	1.4	0	Q8203	1.4	0.9	0	Q8806	0	1.2	135
Q8108	2.4	3.2	0	Q8127	1.4	1.5	0	Q8455	1.1	1.7	8.9	Q8851	0	5.4	81.5

~ D Board Schematic Diagram [Deflection] ~

5-4. SEMICONDUCTORS

CXAB070AP
MCZ3001D

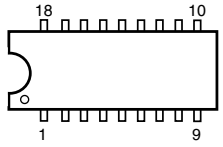

LM318P
LM358N
LM393DT
LM393N
M24C16-MN6T(A)

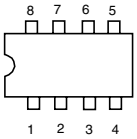

PST573IMT

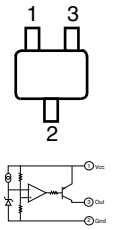

CXA1875AM-T4

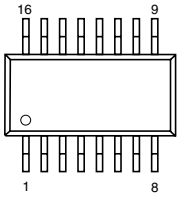

(TOP VIEW)

LM78L05ACZ

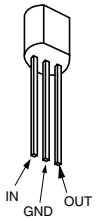

SAA5665HL/M1D/0358

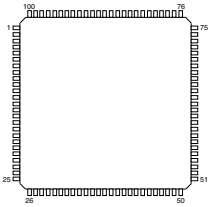

CXA2100AQ-TL

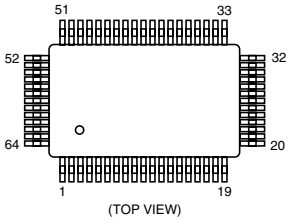

(TOP VIEW)

MSP3411G-QA-B10

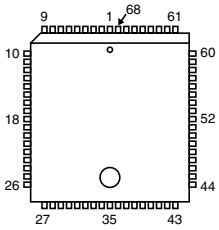

(TOP VIEW)

SBX3081-51(30)

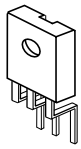

SDA9488X-B23GEG

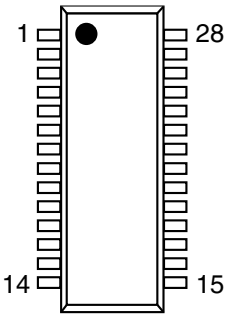

K6T2008V2A-YF70T00

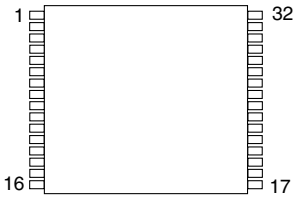

NJM3404AD-W
UPC4558G2

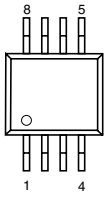

(TOP VIEW)

LA6500-FA

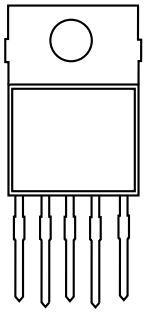

PQ30RV11

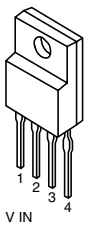

1 : V IN
2 : V OUT
3 : GND
4 : ON/OFF CONTROL

STV9379

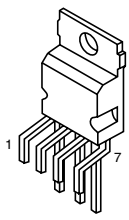

TCET1103G

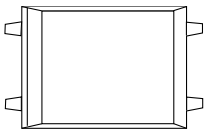

TDA6111Q/N4

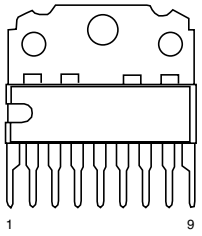

TDA7497

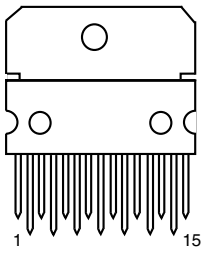

VPS9402-A32GEG

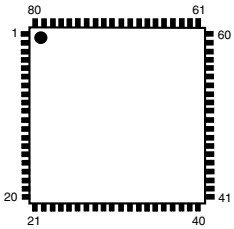

(TOP VIEW)

BA12T
BAO33T
IRF614-005
IRF620
SPA07N60C2
2SA2005
2SC5511

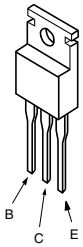

DTA144EK
DTC144TKA-T146
2SA1162-G

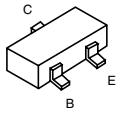

DTA144ESA
2SA933AS-QT
2SC2785-HFE

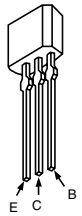

L7809CV/LSY
STP5NB40FP
STP5NB40(030Y)
2SC5698-CA
2S5696-SONY-CA

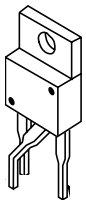

MSB709-RT1
MSD601-RST1
M1MA152WA-T1
UN2111
UN213
2SK2036(TE85L)

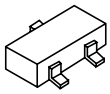

RB705D

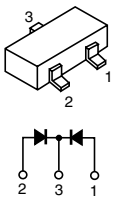

SE135N-LF4

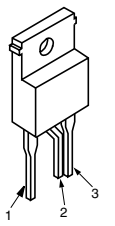

1 V OUT SENSE
2 COLLECTOR
3 GND

2SA1837(LBS2S0N)

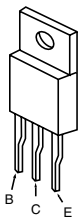

2SB734-34

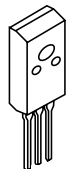

2SC2688(5)-LK

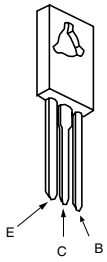

BAS216

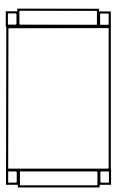

BAS316-115
MMDL914T1
UDZSTE-176.2B

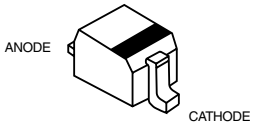

BYV98-200-RAS 15/12

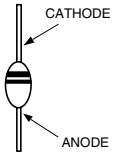

D1NL20U
EGP20G
EL1Z
GP08D
UF4005PKG23

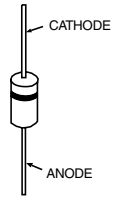

D2S4MTA1

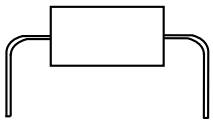

ERA38-06
ERA85-009
HZS9.1NB2
MTZJ-13B
MTZJ-33B
MTZJ-3.6A
MTZJ-4.7C
MTZJ-T-77-22
RD15ES-B2
RD39ES-B2
RD5.6ESB2
1SS119-25
1SS133T-77

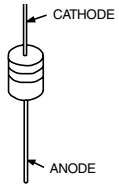

FBIU4D7MA-B
RBV-406B
S1VB40

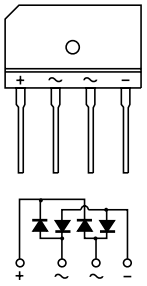

GS1B460/45

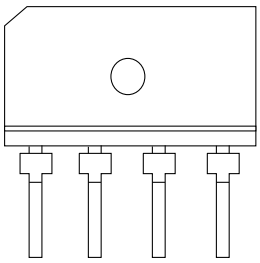

TLHK5190

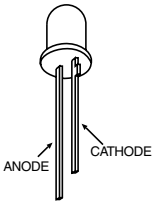

5-5 IC BLOCK DIAGRAMS

A BOARD IC6202/IC6205 BA033T/BA12T

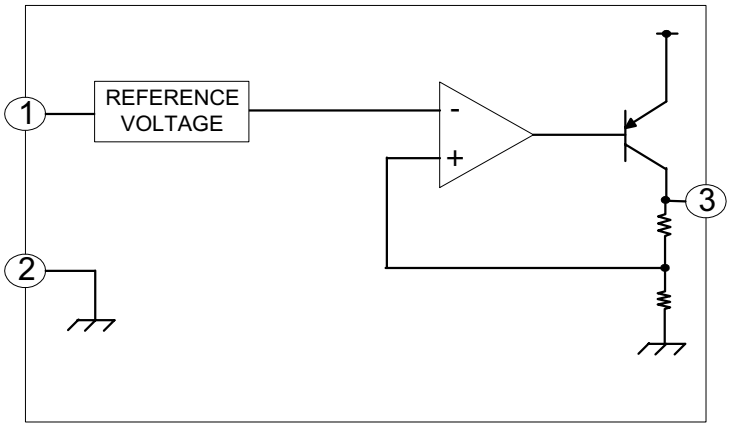

A BOARD IC2500 TDA7497

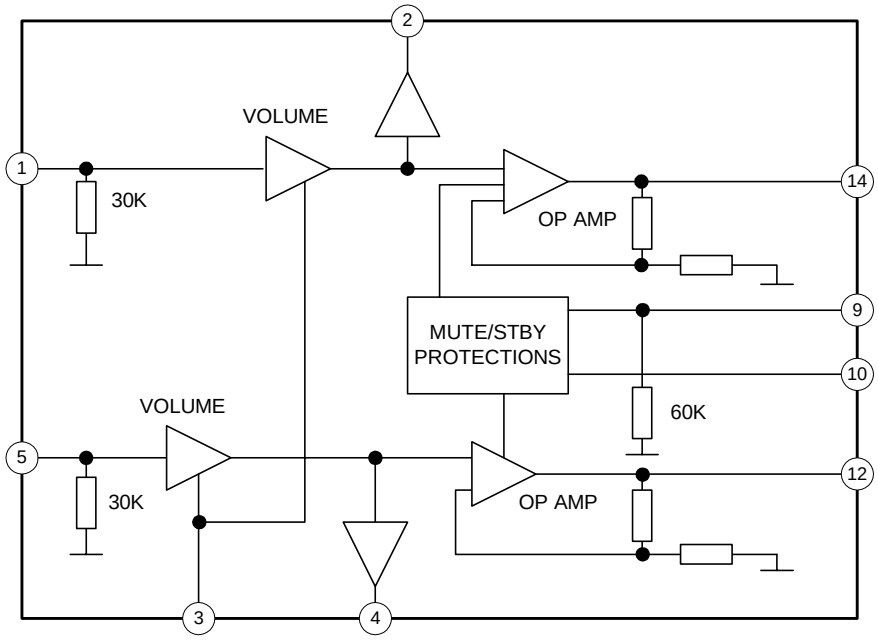

G BOARD IC6001 MCZ3001D

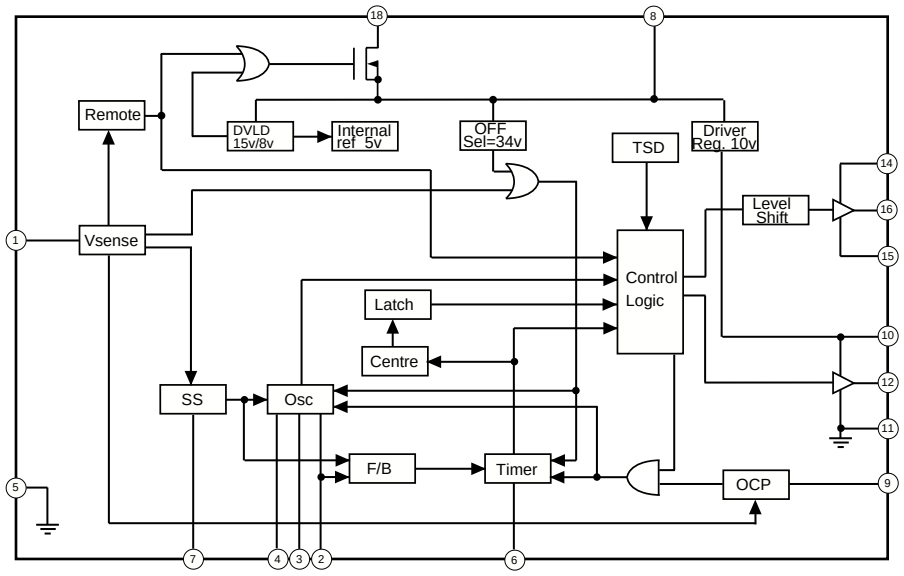

A BOARD IC2000 MSP3411G

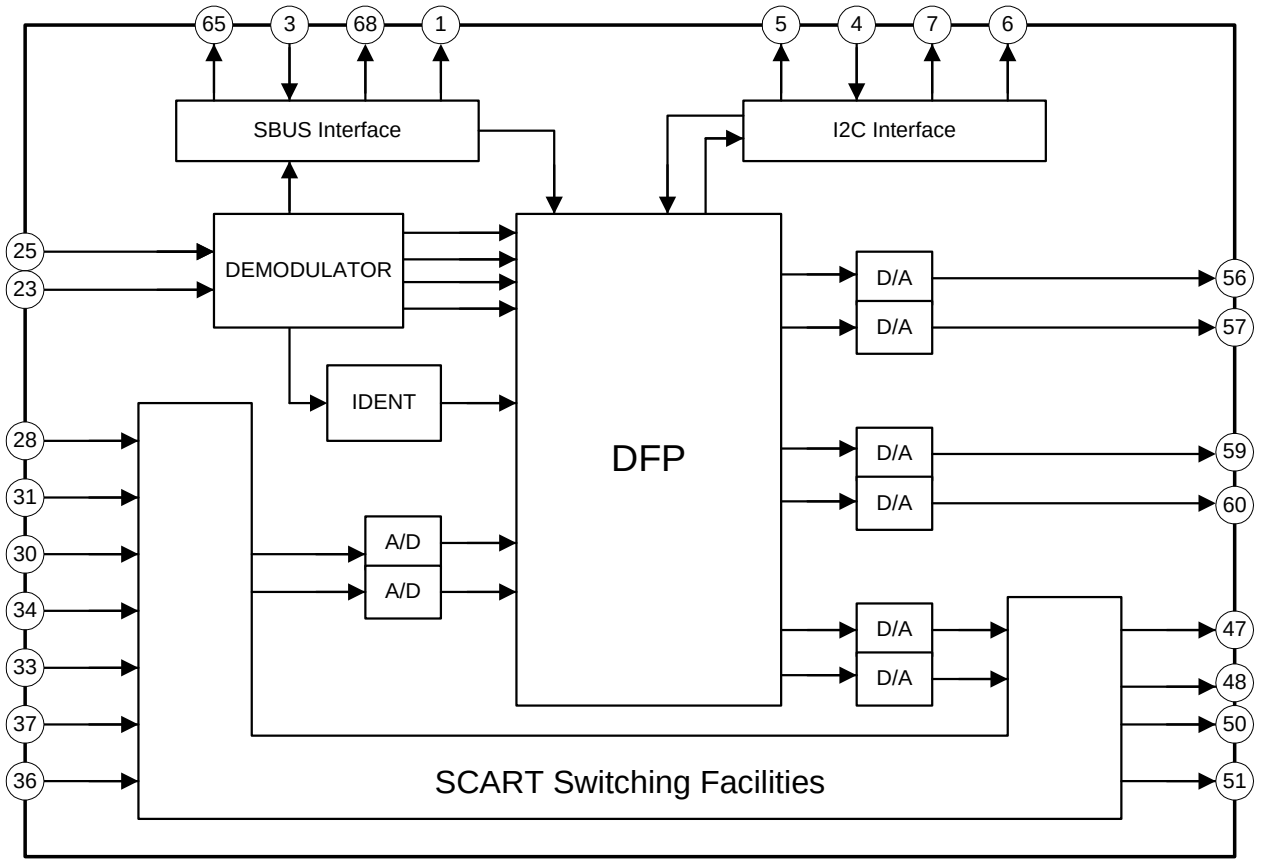

G BOARD IC6003 SE135N-LF4

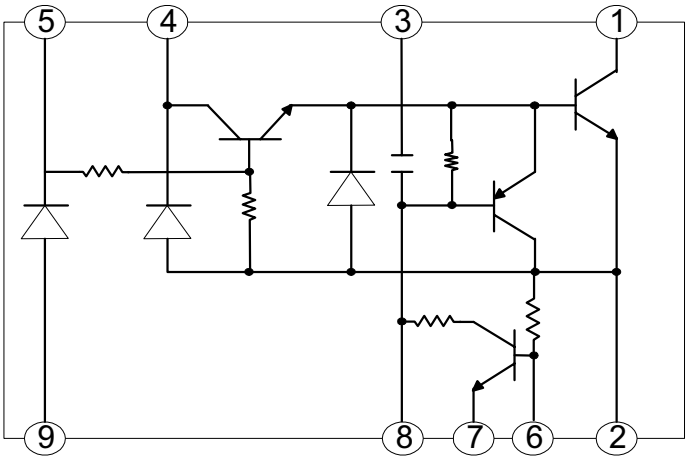

A BOARD IC5301/IC5302 LA6393DLL

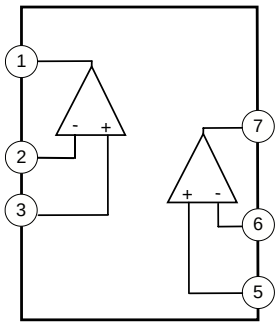

A BOARD IC5400 STV9379

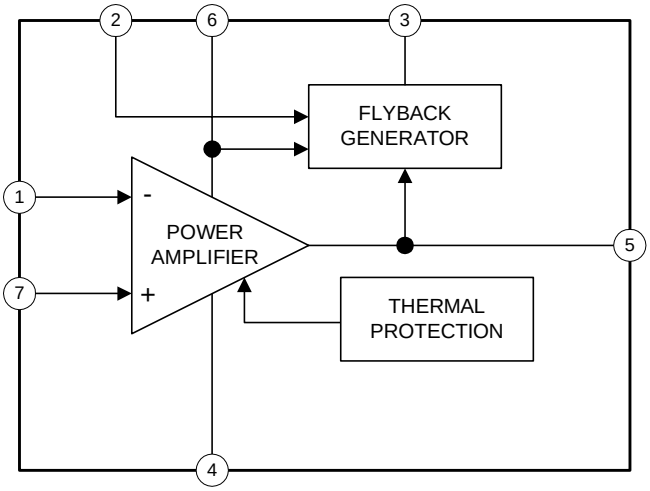

A BOARD IC5300 LM358N

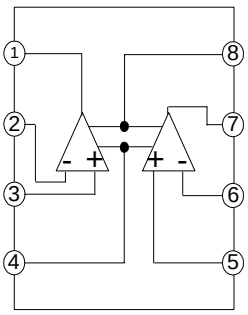

SECTION 6
EXPLODED VIEWS

NOTE :

- Items with no part number and no description are not stocked because they are seldom required for routine service.
- The construction parts of an assembled part are indicated with a collation number in the remarks column.
- Items marked "*" are not stocked since they are seldom required for routine service. Some delay should be anticipated when ordering these items.

Note : Les composants indentifies par une trame et par une marque ⚠ sonte d'une importance critique pour la securite. Ne les remplacer que par des pieces du numero specifie.

Note : The components identified by shading and marked ⚠ are critical for safety. Replace only with the part numbers specified in the parts list.

6-1. CHASSIS

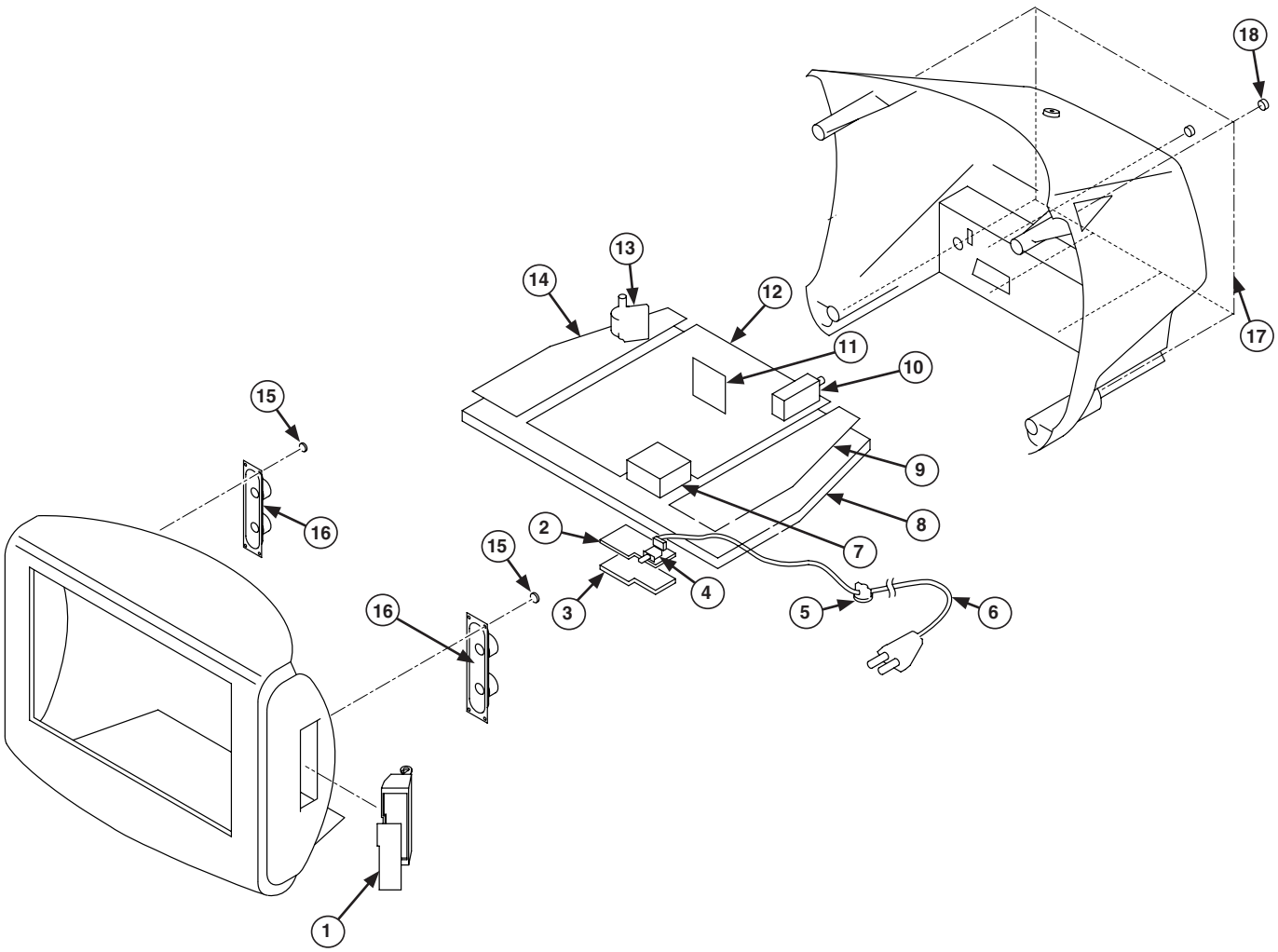

REF.NO.		PART.NO	DESCRIPTION	REMARK
1		*A-1647-043-A	H2 BOARD, COMPLETE	
2		*A-1624-102-A	F2 BOARD, COMPLETE	
3		*4-206-055-12	BRACKET F2	
4	⚠	1-571-433-21	SWITCH, PUSH (AC POWER)	
5		*4-202-531-01	AC CORD LOCK (SC)	
6	⚠	1-792-035-11	CORD, POWER (WITH FILTER)	
7		1-424-855-11	COIL, CHOKE 29MMH	
8		*4-206-106-01	BRACKET, MAIN	
9		*A-1300-179-A	G BOARD, COMPLETE	
10		8-598-535-12	FRONTEND BTF-EF411	
11		*A-1300-531-A	M BOARD, COMPLETE	
12		*A-1300-546-A	A BOARD, COMPLETE	
13	⚠	1-453-441-11	TRANSFORMER ASSY, FLYBACK (NX-4522//Z2N4)	
14		*A-1300-178-A	D BOARD, COMPLETE	
15		7-685-663-71	SCREW +BVTP 4x16 TYPE 2 IT-3	
16		1-529-408-11	SPEAKER (4.2x24CM)	
17		4-206-062-41	COVER REAR	
18		7-685-663-79	SCREW +BVTP 4x16 TYPE 2 IT-3	

6-2. PICTURE TUBE

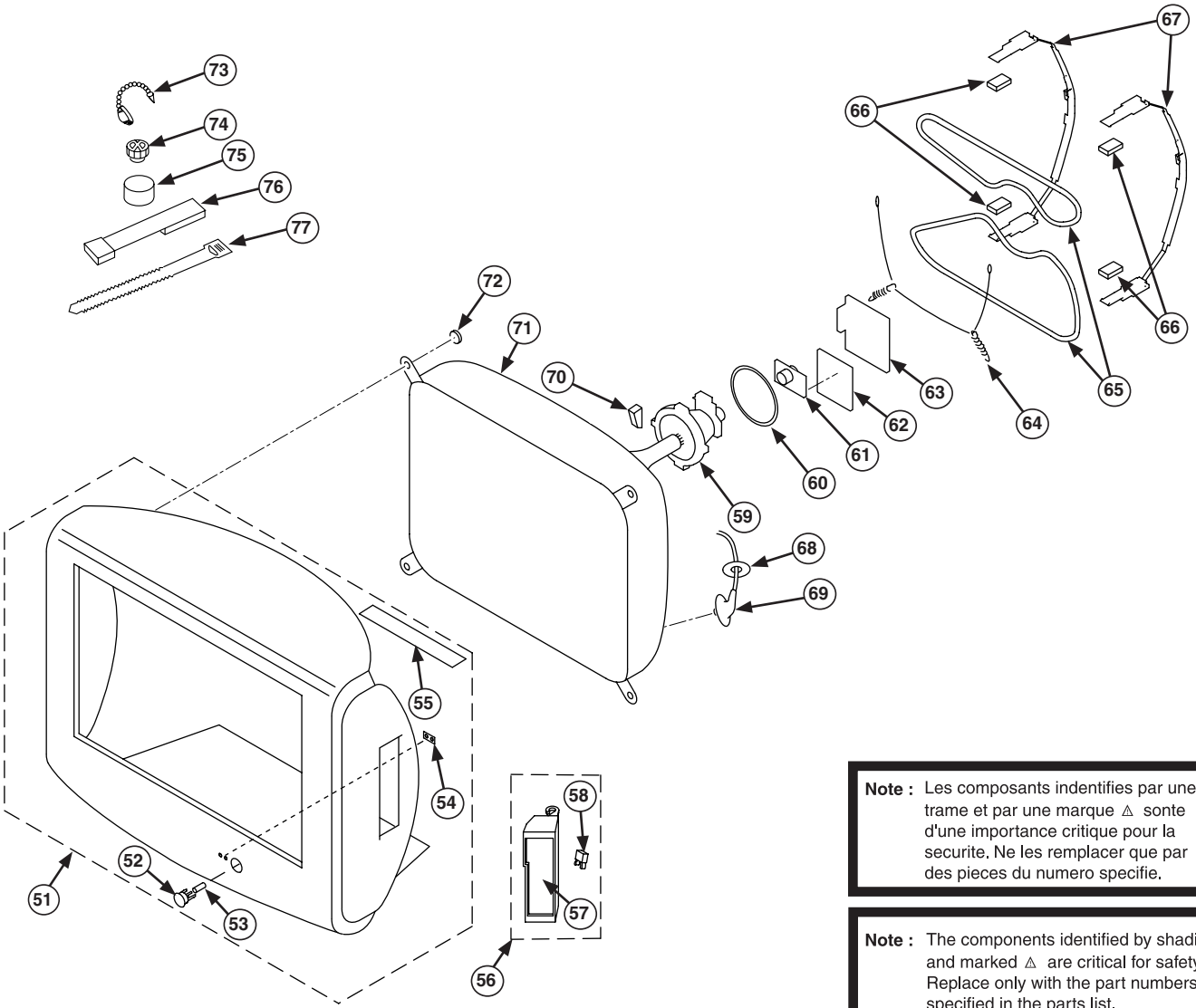

Note : Les composants indentifies par une trame et par une marque ⚠ sonte d'une importance critique pour la securite. Ne les remplacer que par des pieces du numero specifie.

Note : The components identified by shading and marked ⚠ are critical for safety. Replace only with the part numbers specified in the parts list.

REF.NO.		PART.NO	DESCRIPTION	REMARK
51		X-4040-294-1	BEZNET ASSY	52-55
52		4-205-948-03	POWER BUTTON	
53		4-205-828-01	SPRING	
54		4-205-375-01	GUIDE, LIGHT	
55		4-204-865-01	SHEET, BLOTTING	
56		X-4039-993-1	DOOR ASSY	57-58
57		4-205-946-02	DOOR	
58		4-047-464-01	CATCHER, PUSH	
59	⚠	1-451-480-22	DEFLECTION YOKE (Y32RVC2)	
60		1-419-363-11	COIL, NA ROTATION	
61		8-453-011-11	NECK ASSY, (NA299-M)	
62		*A-1300-627-A	VM BOARD, COMPLETE	
63		*A-1300-545-A	C BOARD, COMPLETE	
64		4-369-318-21	SPRING, TENSION	

REF.NO.		PART.NO	DESCRIPTION	REMARK
65	⚠	1-424-888-11	COIL, DEGAUSSING	
66		4-203-390-11	CUSHION, DGC	
67		*4-204-768-01	HOLDER, DGC (29″)	
68		*4-203-022-01	HOLDER, HV	
69	⚠	1-251-946-62	CAP ASSY, HIGH-VOLTAGE	
70		3-704-495-01	SPACER, DY	
71	⚠	8-735-079-05	PICTURE TUBE (W76LLZ060X)	
72		4-046-765-12	SCREW, TAPPING 7+CROWN WASHER	
73		4-308-870-00	CLIP, LEAD WIRE	
74		1-452-094-00	MAGNET, ROTATABLE DISK; 15MM	
75		1-452-032-11	MAGNET, DISK; 10MM	
76		X-4387-214-1	PERMALLOY ASSY, CORRECTION	
77		3-701-007-00	BAND, BINDING	

SECTION 7
ELECTRICAL PARTS LIST

PARTS LISTING TABLE OF CONTENTS

	Page
D BOARD COMMON Parts List :	51
G BOARD COMPLETE Parts List :	54
M BOARD COMPLETE Parts List :	56
C BOARD COMMON Parts List :	57
A BOARD COMPLETE Parts List :	58
VM BOARD COMPLETE Parts List :	67
F2 BOARD COMPLETE Parts List :	68
H2 BOARD COMPLETE Parts List :	68
MISCELLANEOUS :	69
ACCESSORIES AND PACKAGING MATERIALS :	69
REMOTE COMMANDER :	69

Note : Refer to the designated variant parts list when seeking a part indicated by an asterisk (*)
Parts indicated (XX) on the Schematic Diagram are not used in this model and therefore do not appear in the Parts List.

REF.NO.	PART.NO	DESCRIPTION	REMARK
	*** A-1300-178-A**	**COMPLETE PC BOARD, D**	
	4-382-854-01	SCREW (M3X8), P, SW (+)	
		< CAPACITOR >	
C8100	1-136-165-00	FILM 0.1UF	5.00% 50V
C8101	1-136-165-00	FILM 0.1UF	5.00% 50V
C8102	1-136-165-00	FILM 0.1UF	5.00% 50V
C8103	1-115-416-11	CERAMIC CHIP 0.001UF	5.00% 25V
C8104	1-115-416-11	CERAMIC CHIP 0.001UF	5.00% 25V
C8105	1-126-947-11	ELECT 47UF	20.00% 35V
C8106	1-164-315-11	CERAMIC CHIP 470PF	5.00% 50V
C8107	1-216-685-11	METAL CHIP 27K	0.5% 1/10W
C8108	1-162-970-11	CERAMIC CHIP 0.01UF	10.00% 25V
C8109	1-126-947-11	ELECT 47UF	20.00% 35V
C8112	1-164-227-11	CERAMIC CHIP 0.022UF	10.00% 25V
C8113	1-162-970-11	CERAMIC CHIP 0.01UF	10.00% 25V
C8114	1-126-964-11	ELECT 10UF	20.00% 50V
C8115	1-162-962-11	CERAMIC CHIP 470PF	10.00% 50V
C8116	1-115-416-11	CERAMIC CHIP 0.001UF	5.00% 25V
C8117	1-115-416-11	CERAMIC CHIP 0.001UF	5.00% 25V
C8118	1-162-970-11	CERAMIC CHIP 0.01UF	10.00% 25V
C8119	1-107-826-11	CERAMIC CHIP 0.1UF	10.00% 16V
C8120	1-165-176-11	CERAMIC CHIP 0.047UF	10.00% 16V
C8125	1-162-968-11	CERAMIC CHIP 0.0047UF	10.00% 50V
C8126	1-165-176-11	CERAMIC CHIP 0.047UF	10.00% 16V
C8128	1-162-968-11	CERAMIC CHIP 0.0047UF	10.00% 50V
C8131	1-126-964-11	ELECT 10UF	20.00% 50V
C8132	1-164-230-11	CERAMIC CHIP 220PF	5.00% 50V
C8134	1-102-935-00	CERAMIC 2PF	0.25PF 50V
C8135	1-126-964-11	ELECT 10UF	20.00% 50V
C8136	1-126-964-11	ELECT 10UF	20.00% 50V
C8140	1-164-004-11	CERAMIC CHIP 0.1UF	10.00% 25V
C8141	1-136-165-00	FILM 0.1UF	5.00% 50V
C8207	1-165-176-11	CERAMIC CHIP 0.047UF	10.00% 16V
C8208	1-162-970-11	CERAMIC CHIP 0.01UF	10.00% 25V
C8209	1-164-315-11	CERAMIC CHIP 470PF	5.00% 50V
C8210	1-162-964-11	CERAMIC CHIP 0.001UF	10.00% 50V
C8801	1-126-947-11	ELECT 47UF	20.00% 35V
C8802	1-126-960-11	ELECT 1UF	20.00% 50V
C8803	1-126-960-11	ELECT 1UF	20.00% 50V
C8804	1-102-114-00	CERAMIC 470PF	10.00% 50V
C8805	1-102-114-00	CERAMIC 470PF	10.00% 50V
C8808	1-102-030-00	CERAMIC 330PF	10.00% 500V
C8809	1-102-030-00	CERAMIC 330PF	10.00% 500V
C8810	1-107-368-11	MYLAR 0.047UF	10.00% 200V
C8811	1-107-368-11	MYLAR 0.047UF	10.00% 200V
C8812	1-162-131-11	CERAMIC 220PF	10.00% 2KV
C8813	1-162-134-11	CERAMIC 470PF	10.00% 2KV
C8814	1-117-640-11	FILM 6800PF	3.00% 1.2KV
C8815	1-117-835-11	FILM 6200PF	3.00% 1.5KV
C8816	1-162-964-11	CERAMIC CHIP 0.001UF	10.00% 50V
C8817	1-125-893-11	FILM 680PF	3.00% 1.5KV
C8818	1-125-893-11	FILM 680PF	3.00% 1.5KV
C8819	1-125-893-11	FILM 680PF	3.00% 1.5KV
C8820	1-125-893-11	FILM 680PF	3.00% 1.5KV
C8824	1-107-846-11	FILM 0.1UF	5.00% 400V
C8825	1-117-662-11	FILM 0.18UF	5.00% 250V
C8826	1-115-519-11	FILM 0.56UF	5.00% 250V
C8827	1-107-846-11	FILM 0.1UF	5.00% 400V
C8828	1-127-681-11	FILM 10000PF	2% 100V
C8829	1-127-680-11	FILM 4700PF	2% 100V
C8830	1-107-655-11	ELECT 47UF	20.00% 250V
C8831	1-102-228-00	CERAMIC 470PF	10.00% 500V
C8832	1-126-941-11	ELECT 470UF	20.00% 25V
C8833	1-126-941-11	ELECT 470UF	20.00% 25V
C8834	1-102-228-00	CERAMIC 470PF	10.00% 500V
C8835	1-102-228-00	CERAMIC 470PF	10.00% 500V
C8836	1-123-024-21	ELECT 33UF	160V
C8837	1-106-375-12	MYLAR 0.022UF	5.00% 200V
C8840	1-165-176-11	CERAMIC CHIP 0.047UF	10.00% 16V
C8841	1-126-947-11	ELECT 47UF	20.00% 35V
C8844	1-115-513-21	FILM 0.18UF	5.00% 250V
C8851	1-162-131-11	CERAMIC 220PF	10.00% 2KV
C8852	1-162-129-00	CERAMIC 150PF	10.00% 2KV
C8853	1-129-898-00	FILM 0.0022UF	5.00% 630V
C8855	1-136-205-11	MYLAR 0.022UF	5.00% 630V
C8856	1-102-030-00	CERAMIC 330PF	10.00% 500V
C8860	1-162-964-11	CERAMIC CHIP 0.001UF	10.00% 50V
C8861	1-162-927-11	CERAMIC CHIP 100PF	5.00% 50V
C8869	1-162-964-11	CERAMIC CHIP 0.001UF	10.00% 50V
		< CONNECTOR >	
CN8600	* 1-564-509-11	PLUG, CONNECTOR 6P	
CN8601	* 1-564-506-11	PLUG, CONNECTOR 3P	
CN8611	* 1-785-270-12	PIN, DY CONNECTOR (PC BOARD)	
CN8612	* 1-564-511-11	PLUG, CONNECTOR 8P	
CN8614	* 1-564-508-11	PLUG, CONNECTOR 5P	
CN8616	1-695-915-11	TAB (CONTACT)	
CN8620	1-764-333-11	PIN, CONNECTOR(PCB)(V TYPE)10P	
CN8810	* 1-564-510-11	PLUG, CONNECTOR 7P	
		< DIODE >	
D8102	8-719-081-97	DIODE MMDL914T1	
D8103	8-719-081-97	DIODE MMDL914T1	
D8104	8-719-081-97	DIODE MMDL914T1	
D8105	8-719-081-97	DIODE MMDL914T1	
D8107	8-719-081-97	DIODE MMDL914T1	
D8108	8-719-921-40	DIODE MTZJ-4.7C	

REF.NO.	PART.NO	DESCRIPTION	REMARK
D8128	8-719-081-97	DIODE MMDL914T1	
D8129	8-719-081-97	DIODE MMDL914T1	
D8132	8-719-081-97	DIODE MMDL914T1	
D8133	8-719-081-97	DIODE MMDL914T1	
D8199	8-719-081-97	DIODE MMDL914T1	
D8611	8-719-081-97	DIODE MMDL914T1	
D8612	8-719-081-97	DIODE MMDL914T1	
D8803	8-719-200-02	DIODE 10E-2	
D8805	8-719-302-43	DIODE EL1Z	
D8806	8-719-979-85	DIODE EGP20G	
D8807	8-719-510-73	DIODE S3L20UF4	
D8808	8-719-510-73	DIODE S3L20UF4	
D8811	8-719-110-41	DIODE RD15ESB2	
D8818	8-719-109-89	DIODE RD5.6ESB2	
D8819	8-719-050-38	DIODE M1MA152WK-T1	
D8820	8-719-081-97	DIODE MMDL914T1	
D8851	8-719-970-87	DIODE ERA38-06	
D8856	8-719-081-97	DIODE MMDL914T1	
D8857	8-719-110-41	DIODE RD15ESB2	
D8858	8-719-081-97	DIODE MMDL914T1	
		< FERRITE BEAD >	
FB8806	1-410-397-21	FERRITE 1.1UH	
FB8807	1-410-397-21	FERRITE 1.1UH	
		< IC >	
IC8100	8-759-659-67	IC LA6393DLL	
IC8101	8-759-659-67	IC LA6393DLL	
IC8102	8-759-638-79	IC NJM3404AD-W	
IC8103	8-759-659-67	IC LA6393DLL	
		< JUMPER RESISTOR >	
JR8002	1-216-295-91	SHORT CHIP 0	
JR8003	1-216-295-91	SHORT CHIP 0	
JR8004	1-216-295-91	SHORT CHIP 0	
JR8005	1-216-295-91	SHORT CHIP 0	
JR8007	1-216-295-91	SHORT CHIP 0	
JR8011	1-216-295-91	SHORT CHIP 0	
JR8012	1-216-295-91	SHORT CHIP 0	
JR8014	1-216-295-91	SHORT CHIP 0	
JR8808	1-216-295-91	SHORT CHIP 0	
		< COIL >	
L8801	1-410-397-21	FERRITE 1.1UH	
L8802	1-410-397-21	FERRITE 1.1UH	
L8803	1-410-397-21	FERRITE 1.1UH	
L8805	1-408-947-00	INDUCTOR 2.2MH	
		< INDUCTOR >	
LF8801	1-406-985-11	INDUCTOR 2.2MH	
LF8851	1-406-674-11	INDUCTOR 3.3MH	
		< TRANSISTOR >	
Q8100	8-729-010-29	TRANSISTOR MSD601-RST1	
Q8101	8-729-010-29	TRANSISTOR MSD601-RST1	
Q8102	8-729-010-29	TRANSISTOR MSD601-RST1	
Q8103	8-729-010-29	TRANSISTOR MSD601-RST1	
Q8104	8-729-010-29	TRANSISTOR MSD601-RST1	
Q8105	8-729-010-29	TRANSISTOR MSD601-RST1	
Q8106	8-729-010-29	TRANSISTOR MSD601-RST1	
Q8107	8-729-010-29	TRANSISTOR MSD601-RST1	
Q8108	8-729-010-05	TRANSISTOR MSB709-RT1	
Q8110	8-729-010-05	TRANSISTOR MSB709-RT1	
Q8112	8-729-010-29	TRANSISTOR MSD601-RST1	
Q8113	8-729-010-29	TRANSISTOR MSD601-RST1	
Q8115	8-729-010-05	TRANSISTOR MSB709-RT1	
Q8118	8-729-010-29	TRANSISTOR MSD601-RST1	
Q8119	8-729-010-05	TRANSISTOR MSB709-RT1	
Q8120	8-729-010-05	TRANSISTOR MSB709-RT1	
Q8122	8-729-010-05	TRANSISTOR MSB709-RT1	
Q8123	8-729-010-05	TRANSISTOR MSB709-RT1	
Q8125	8-729-010-29	TRANSISTOR MSD601-RST1	
Q8126	8-729-010-05	TRANSISTOR MSB709-RT1	
Q8127	8-729-010-05	TRANSISTOR MSB709-RT1	
Q8128	8-729-010-29	TRANSISTOR MSD601-RST1	
Q8132	8-729-421-19	TRANSISTOR UN2213	
Q8135	8-729-010-29	TRANSISTOR MSD601-RST1	
Q8136	8-729-010-05	TRANSISTOR MSB709-RT1	
Q8137	8-729-010-29	TRANSISTOR MSD601-RST1	
Q8201	8-729-010-29	TRANSISTOR MSD601-RST1	
Q8202	8-729-010-29	TRANSISTOR MSD601-RST1	
Q8203	8-729-010-05	TRANSISTOR MSB709-RT1	
Q8455	8-729-010-29	TRANSISTOR MSD601-RST1	
Q8801	8-729-048-47	TRANSISTOR 2SC2688(5)-LK	
Q8802	8-729-048-47	TRANSISTOR 2SC2688(5)-LK	
Q8803	8-729-056-16	TRANSISTOR 2SC5698-SONY-CA	
Q8804	8-729-056-17	TRANSISTOR 2SC5696-SONY-CA	
Q8805	8-729-050-48	TRANSISTOR IRF614-005	
Q8806	8-729-047-59	TRANSISTOR STP5NB40FP	
Q8807	8-729-421-19	TRANSISTOR UN2213	
Q8822	8-729-010-29	TRANSISTOR MSD601-RST1	
Q8823	8-729-424-08	TRANSISTOR UN2111	
Q8851	6-550-012-01	TRANSISTOR STP5NB40(033Y)	
		< RESISTOR >	
R8100	1-216-813-11	RES-CHIP 220 5% 1/10W	
R8101	1-216-813-11	RES-CHIP 220 5% 1/10W	
R8102	1-216-825-11	RES-CHIP 2.2K 5% 1/10W	
R8103	1-216-825-11	RES-CHIP 2.2K 5% 1/10W	
R8104	1-216-825-11	RES-CHIP 2.2K 5% 1/10W	

REF.NO.	PART.NO	DESCRIPTION			REMARK
R8105	1-216-821-11	RES-CHIP	1K	5%	1/10W
R8106	1-216-825-11	RES-CHIP	2.2K	5%	1/10W
R8107	1-208-792-11	METAL CHIP	2.7K	0.5%	1/10W
R8108	1-208-792-11	METAL CHIP	2.7K	0.5%	1/10W
R8109	1-208-814-91	METAL CHIP	22K	0.5%	1/10W
R8110	1-208-814-91	METAL CHIP	22K	0.5%	1/10W
R8111	1-216-825-11	RES-CHIP	2.2K	5%	1/10W
R8112	1-216-825-11	RES-CHIP	2.2K	5%	1/10W
R8113	1-216-833-11	RES-CHIP	10K	5%	1/10W
R8114	1-216-833-11	RES-CHIP	10K	5%	1/10W
R8115	1-216-845-11	RES-CHIP	100K	5%	1/10W
R8116	1-216-845-11	RES-CHIP	100K	5%	1/10W
R8117	1-216-833-11	RES-CHIP	10K	5%	1/10W
R8118	1-216-833-11	RES-CHIP	10K	5%	1/10W
R8119	1-216-833-11	RES-CHIP	10K	5%	1/10W
R8120	1-216-825-11	RES-CHIP	2.2K	5%	1/10W
R8121	1-216-825-11	RES-CHIP	2.2K	5%	1/10W
R8122	1-216-825-11	RES-CHIP	2.2K	5%	1/10W
R8123	1-216-841-11	RES-CHIP	47K	5%	1/10W
R8124	1-216-821-11	RES-CHIP	1K	5%	1/10W
R8125	1-216-825-11	RES-CHIP	2.2K	5%	1/10W
R8126	1-216-815-11	RES-CHIP	330	5%	1/10W
R8127	1-208-802-11	METAL CHIP	6.8K	0.5%	1/10W
R8128	1-208-822-11	METAL CHIP	47K	0.5%	1/10W
R8129	1-208-822-11	METAL CHIP	47K	0.5%	1/10W
R8130	1-208-846-11	METAL CHIP	470K	0.5%	1/10W
R8131	1-216-815-11	RES-CHIP	330	5%	1/10W
R8132	1-216-815-11	RES-CHIP	330	5%	1/10W
R8133	1-216-815-11	RES-CHIP	330	5%	1/10W
R8136	1-208-822-11	METAL CHIP	47K	0.5%	1/10W
R8137	1-208-822-11	METAL CHIP	47K	0.5%	1/10W
R8138	1-208-822-11	METAL CHIP	47K	0.5%	1/10W
R8139	1-208-822-11	METAL CHIP	47K	0.5%	1/10W
R8140	1-216-825-11	RES-CHIP	2.2K	5%	1/10W
R8141	1-208-818-11	METAL CHIP	33K	0.5%	1/10W
R8142	1-208-798-11	METAL CHIP	4.7K	0.5%	1/10W
R8143	1-216-825-11	RES-CHIP	2.2K	5%	1/10W
R8144	1-216-846-11	RES-CHIP	120K	5%	1/10W
R8145	1-216-825-11	RES-CHIP	2.2K	5%	1/10W
R8146	1-208-790-11	METAL CHIP	2.2K	0.5%	1/10W
R8149	1-216-828-11	RES-CHIP	3.9K	5%	1/10W
R8150	1-218-867-11	METAL CHIP	6.8K	0.5%	1/10W
R8153	1-216-295-91	SHORT CHIP	0		
R8154	1-216-820-11	RES-CHIP	820	5%	1/10W
R8155	1-216-059-00	RES-CHIP	2.7K	5%	1/10W
R8158	1-208-798-11	METAL CHIP	4.7K	0.5%	1/10W
R8159	1-216-295-91	SHORT CHIP	0		
R8160	1-216-295-91	SHORT CHIP	0		
R8161	1-208-804-11	METAL CHIP	8.2K	0.5%	1/10W
R8162	1-216-821-11	RES-CHIP	1K	5%	1/10W
R8163	1-216-833-11	RES-CHIP	10K	5%	1/10W
R8164	1-208-814-91	METAL CHIP	22K	0.5%	1/10W
R8165	1-208-830-11	METAL CHIP	100K	0.5%	1/10W
R8168	1-216-829-11	RES-CHIP	4.7K	5%	1/10W
R8169	1-208-830-11	METAL CHIP	100K	0.5%	1/10W
R8170	1-216-815-11	RES-CHIP	330	5%	1/10W
R8171	1-216-825-11	RES-CHIP	2.2K	5%	1/10W
R8174	1-216-837-11	RES-CHIP	22K	5%	1/10W
R8175	1-218-867-11	METAL CHIP	6.8K	0.5%	1/10W
R8176	1-216-833-11	RES-CHIP	10K	5%	1/10W
R8177	1-216-829-11	RES-CHIP	4.7K	5%	1/10W
R8179	1-216-295-91	SHORT CHIP	0		
R8180	1-216-825-11	RES-CHIP	2.2K	5%	1/10W
R8181	1-216-295-91	SHORT CHIP	0		
R8182	1-216-841-11	RES-CHIP	47K	5%	1/10W
R8183	1-216-825-11	RES-CHIP	2.2K	5%	1/10W
R8186	1-216-828-11	RES-CHIP	3.9K	5%	1/10W
R8188	1-216-829-11	RES-CHIP	4.7K	5%	1/10W
R8189	1-216-818-11	RES-CHIP	560	5%	1/10W
R8190	1-216-825-11	RES-CHIP	2.2K	5%	1/10W
R8191	1-215-925-11	METAL OXIDE	22K	5%	3W
R8196	1-249-377-11	CARBON	0.47	5%	1/4W
R8197	1-216-841-11	RES-CHIP	47K	5%	1/10W
R8203	1-216-295-91	SHORT CHIP	0		
R8204	1-216-295-91	SHORT CHIP	0		
R8205	1-216-295-91	SHORT CHIP	0		
R8206	1-208-842-11	METAL CHIP	330K	0.5%	1/10W
R8207	1-216-849-11	RES-CHIP	220K	5%	1/10W
R8209	1-216-295-91	SHORT CHIP	0		
R8210	1-216-825-11	RES-CHIP	2.2K	5%	1/10W
R8211	1-216-833-11	RES-CHIP	10K	5%	1/10W
R8212	1-216-825-11	RES-CHIP	2.2K	5%	1/10W
R8215	1-208-822-11	METAL CHIP	47K	0.5%	1/10W
R8216	1-208-822-11	METAL CHIP	47K	0.5%	1/10W
R8217	1-216-833-11	RES-CHIP	10K	5%	1/10W
R8219	1-216-841-11	RES-CHIP	47K	5%	1/10W
R8220	1-216-834-11	RES-CHIP	12K	5%	1/10W
R8221	1-216-837-11	RES-CHIP	22K	5%	1/10W
R8224	1-216-827-11	RES-CHIP	3.3K	5%	1/10W
R8456	1-216-845-11	RES-CHIP	100K	5%	1/10W
R8457	1-216-834-11	RES-CHIP	12K	5%	1/10W
R8458	1-216-841-11	RES-CHIP	47K	5%	1/10W
R8459	1-216-825-11	RES-CHIP	2.2K	5%	1/10W
R8800	1-247-895-91	CARBON	470K	5%	1/4W
R8804	1-249-408-11	CARBON	180	5%	1/4W
R8805	1-249-408-11	CARBON	180	5%	1/4W
R8806	1-249-411-11	CARBON	330	5%	1/4W
R8807	1-249-411-11	CARBON	330	5%	1/4W
R8808	1-260-340-11	CARBON	10K	5%	1/2W
R8809	1-260-340-11	CARBON	10K	5%	1/2W

Note : The components identified by shading and marked ⚠ are critical for safety. Replace only with the part numbers specified in the parts list.

D **G**

REF.NO.		PART.NO	DESCRIPTION			REMARK
R8810		1-216-460-11	METAL OXIDE	3.9K	5%	2W
R8811		1-215-896-00	METAL OXIDE	4.7K	5%	2W
R8812		1-215-896-00	METAL OXIDE	4.7K	5%	2W
R8813		1-215-895-11	METAL OXIDE	3.3K	5%	2W
R8814		1-215-880-00	METAL OXIDE	10	5%	2W
R8815		1-215-880-00	METAL OXIDE	10	5%	2W
R8816		1-216-365-00	METAL OXIDE	0.47	5%	2W
R8817		1-216-361-00	METAL OXIDE	0.22	5%	2W
R8818		1-249-405-11	CARBON	100	5%	1/4W
R8819		1-247-807-31	CARBON	100	5%	1/4W
R8831		1-260-124-11	CARBON	120K	5%	1/2W
R8833		1-202-972-61	FUSIBLE	1	5%	1/4W
R8834		1-260-288-11	CARBON	0.47	5%	1/2W
R8835		1-260-288-11	CARBON	0.47	5%	1/2W
R8836		1-249-431-11	CARBON	15K	5%	1/4W
R8837		1-215-894-11	METAL OXIDE	2.2K	5%	2W
R8838		1-214-905-11	METAL	47K	1%	1/2W
R8839		1-215-894-11	METAL OXIDE	2.2K	5%	2W
R8840		1-247-843-11	CARBON	3.3K	5%	1/4W
R8842		1-260-123-11	CARBON	100K	5%	1/2W
R8843		1-216-833-11	RES-CHIP	10K	5%	1/10W
R8844		1-216-838-11	RES-CHIP	27K	5%	1/10W
R8845		1-216-833-11	RES-CHIP	10K	5%	1/10W
R8851		1-260-123-11	CARBON	100K	5%	1/2W
R8852		1-260-123-11	CARBON	100K	5%	1/2W
R8853		1-260-123-11	CARBON	100K	5%	1/2W
R8854		1-249-425-11	CARBON	4.7K	5%	1/4W
R8856		1-215-922-11	METAL OXIDE	6.8K	5%	3W
R8857		1-215-922-11	METAL OXIDE	6.8K	5%	3W
R8858		1-215-922-11	METAL OXIDE	6.8K	5%	3W
R8859		1-215-922-11	METAL OXIDE	6.8K	5%	3W
R8865		1-216-829-11	RES-CHIP	4.7K	5%	1/10W
R8866		1-216-295-91	SHORT CHIP	0		
R8867		1-216-829-11	RES-CHIP	4.7K	5%	1/10W
R8868		1-208-852-11	METAL CHIP	820K	0.5%	1/10W
R8869		1-216-837-11	RES-CHIP	22K	5%	1/10W
R8870		1-216-837-11	RES-CHIP	22K	5%	1/10W
R8885		1-208-854-11	METAL CHIP	1M	0.5%	1/10W
R8886		1-208-850-11	METAL CHIP	680K	0.5%	1/10W
R8887		1-216-841-11	RES-CHIP	47K	5%	1/10W
R8888		1-249-441-11	CARBON	100K	5%	1/4W
R8895		1-249-443-11	CARBON	0.47	5%	1/4W
R8896		1-249-443-11	CARBON	0.47	5%	1/4W
R8897		1-215-489-00	METAL	680K	1%	1/4W
R8898		1-215-493-00	METAL	1M	1%	1/4W
R8899		1-215-493-00	METAL	1M	1%	1/4W

< TRANSFORMER >

T8800	⚠	8-598-851-50	FBT ASSY NX-4522//Z	
T8801		1-437-430-11	TRANSFORMER, FERRITE (HDT)	
T8802		1-437-430-11	TRANSFORMER, FERRITE (HDT)	
T8852		1-437-690-11	TRANSFORMER, FERRITE (DFT)	

* A-1300-179-A COMPLETE PC BOARD, G

		4-382-854-01	SCREW (M3X8), P, SW (+)	

< CAPACITOR >

REF.NO.		PART.NO	DESCRIPTION			
C6001	⚠	1-137-999-11	FILM	0.1UF		275V
C6002	⚠	1-137-999-11	FILM	0.1UF		275V
C6003	⚠	1-119-899-51	CERAMIC	1000PF	10.00%	250V
C6004	⚠	1-119-899-51	CERAMIC	1000PF	10.00%	250V
C6005		1-126-965-91	ELECT	22UF	20.00%	50V
C6006		1-117-753-11	ELECT(BLOCK)	470UF	20.00%	450V
C6007		1-126-964-11	ELECT	10UF	20.00%	50V
C6008		1-126-963-11	ELECT	4.7UF	20.00%	50V
C6010		1-136-165-00	FILM	0.1UF	5.00%	50V
C6011		1-162-964-11	CERAMIC CHIP	0.001UF	10.00%	50V
C6012	⚠	1-161-830-00	CERAMIC	0.0047UF		500V
C6013	⚠	1-161-830-00	CERAMIC	0.0047UF		500V
C6015		1-115-339-11	CERAMIC CHIP	0.1UF	10.00%	50V
C6016		1-161-830-00	CERAMIC	0.0047UF		500V
C6017		1-161-830-00	CERAMIC	0.0047UF		500V
C6018		1-126-949-11	ELECT	220UF	20.00%	35V
C6020		1-135-946-21	FILM	47000PF	3%	800V
C6021		1-164-645-11	CERAMIC	1000PF	10.00%	500V
C6022		1-126-963-11	ELECT	4.7UF	20.00%	50V
C6023		1-110-626-11	ELECT	330UF	20.00%	160V
C6024		1-164-625-11	CERAMIC	680PF	10.00%	500V
C6025		1-164-625-11	CERAMIC	680PF	10.00%	500V
C6026		1-164-625-11	CERAMIC	680PF	10.00%	500V
C6027		1-164-625-11	CERAMIC	680PF	10.00%	500V
C6028		1-128-548-11	ELECT	4700UF	20.00%	25V
C6029		1-126-939-11	ELECT	10000UF	20.00%	16V
C6030		1-119-940-51	ELECT	4700UF	20.00%	50V
C6032	⚠	1-113-927-11	CERAMIC	0.01UF		250V
C6033		1-162-964-11	CERAMIC CHIP	0.001UF	10.00%	50V
C6034		1-162-968-11	CERAMIC CHIP	0.0047UF	10.00%	50V
C6035		1-136-165-00	FILM	0.1UF	5.00%	50V
C6036		1-136-479-11	FILM	0.001UF	5.00%	100V
C6037		1-126-947-11	ELECT	47UF	20.00%	35V
C6038		1-164-645-11	CERAMIC	1000PF	10.00%	500V
C6039		1-125-891-11	CERAMIC CHIP	0.47UF	10.00%	10V
C6040		1-115-340-11	CERAMIC CHIP	0.22UF	10.00%	25V
C6045		1-115-339-11	CERAMIC CHIP	0.1UF	10.00%	50V
C6102		1-126-943-11	ELECT	2200UF	20.00%	25V
C6103		1-126-971-11	ELECT	470UF	20.00%	50V
C6105		1-126-964-11	ELECT	10UF	20.00%	50V
C6106		1-126-964-11	ELECT	10UF	20.00%	50V

Note : The components identified by shading and marked ⚠ are critical for safety. Replace only with the part numbers specified in the parts list.

G

REF.NO.		PART.NO	DESCRIPTION	REMARK
			< CONNECTOR >	
CN6001	⚠	* 1-691-291-11	PIN, CONNECTOR (PC BOARD) 5P	
CN6002	⚠	* 1-508-786-00	PIN, CONNECTOR (5MM PITCH) 2P	
CN6003	⚠	* 1-508-765-00	PIN, CONNECTOR (5MM PITCH) 3P	
CN6004	⚠	* 1-691-960-11	PIN, CONNECTOR (PC BOARD) 3P	
CN6005		* 1-564-509-11	PLUG, CONNECTOR 6P	
CN6006		* 1-564-516-11	PLUG, CONNECTOR 13P	
CN6008		* 1-564-507-11	PLUG, CONNECTOR 4P	
			< DIODE >	
D6001		6-500-067-01	DIODE GSIB460L/45	
D6002		8-719-982-26	DIODE MTZJ-33B	
D6004		8-719-979-64	DIODE UF4005PKG23	
D6006		8-719-081-97	DIODE MMDL914T1	
D6007		8-719-081-97	DIODE MMDL914T1	
D6008		8-719-063-70	DIODE D1NL20U	
D6009		8-719-110-41	DIODE RD15ESB2	
D6010		8-719-085-24	DIODE FBIU4D7M1-B	
D6016		8-719-060-88	DIODE D4SBS6	
D6031		8-719-080-59	DIODE EK19-V0	
D6032		8-719-080-59	DIODE EK19-V0	
D6033		8-719-022-97	DIODE D2S4MF	
D6034		8-719-022-97	DIODE D2S4MF	
D6036		1-216-295-91	SHORT CHIP 0	
D6101		8-719-081-97	DIODE MMDL914T1	
D6102		8-719-511-40	DIODE S1VB40	
D6103		8-719-081-97	DIODE MMDL914T1	
D6104		8-719-081-97	DIODE MMDL914T1	
D6105		8-719-081-97	DIODE MMDL914T1	
D6106		8-719-081-97	DIODE MMDL914T1	
D6107		8-719-081-97	DIODE MMDL914T1	
			< FERRITE BEAD >	
FB6002		1-410-397-21	FERRITE 1.1UH	
FB6003		1-410-397-21	FERRITE 1.1UH	
			< IC >	
IC6001		8-759-670-30	IC MCZ3001D	
IC6003		8-749-016-19	IC SE135N-LF4	
			< JUMPER RESISTOR >	
JR6001		1-216-295-91	SHORT CHIP 0	
JR6004		1-216-295-91	SHORT CHIP 0	
			< COIL >	
L6001		1-406-663-21	INDUCTOR 47UH	
L6002		1-412-529-11	INDUCTOR 22UH	
L6003		1-412-529-11	INDUCTOR 22UH	
L6006		1-406-659-11	INDUCTOR 10UH	
L6007		1-412-525-31	INDUCTOR 10UH	
			< PHOTOCOUPLER >	
PH6001	⚠	8-749-016-21	IC TCET1103G	
			< TRANSISTOR >	
Q6003		8-729-010-29	TRANSISTOR MSD601-RST1	
Q6005		8-729-029-56	TRANSISTOR DTA144ESA	
Q6006		6-550-146-01	TRANSISTOR SPA07N60C2-E8152	
Q6007		6-550-146-01	TRANSISTOR SPA07N60C2-E8152	
Q6010		8-729-119-78	TRANSISTOR 2SC2785-HFE	
Q6101		8-729-029-56	TRANSISTOR DTA144ESA	
Q6102		8-729-010-29	TRANSISTOR MSD601-RST1	
Q6103		8-729-029-56	TRANSISTOR DTA144ESA	
Q6104		8-729-010-29	TRANSISTOR MSD601-RST1	
Q6105		8-729-010-29	TRANSISTOR MSD601-RST1	
			< RESISTOR >	
R6003	⚠	1-202-933-61	FUSIBLE 0.1 10% 1/2W	
R6004	⚠	1-205-998-11	CEMENTED 1 5% 10W	
R6005	⚠	1-205-998-11	CEMENTED 1 5% 10W	
R6006	⚠	1-205-998-11	CEMENTED 1 5% 10W	
R6007		1-243-979-21	METAL OXIDE 0.1 5% 2W	
R6008		1-243-979-21	METAL OXIDE 0.1 5% 2W	
R6009		1-208-810-11	METAL CHIP 15K 0.5% 1/10W	
R6010		1-215-481-00	METAL 330K 1% 1/4W	
R6013	⚠	1-218-265-11	METAL 8.2M 5% 1W	
R6014		1-215-926-00	METAL OXIDE 33K 5% 3W	
R6015		1-208-757-11	METAL CHIP 91 0.5% 1/10W	
R6016		1-216-821-11	RES-CHIP 1K 5% 1/10W	
R6017		1-216-833-11	RES-CHIP 10K 5% 1/10W	
R6018		1-260-131-11	CARBON 470K 5% 1/2W	
R6019		1-260-129-11	CARBON 330K 5% 1/2W	
R6020		1-216-820-11	RES-CHIP 820 5% 1/10W	
R6021		1-216-362-11	METAL OXIDE 0.27 5% 2W	
R6022		1-216-833-11	RES-CHIP 10K 5% 1/10W	
R6024		1-216-615-11	METAL CHIP 33 0.5% 1/10W	
R6029		1-216-833-11	RES-CHIP 10K 5% 1/10W	
R6030		1-216-817-11	RES-CHIP 470 5% 1/10W	
R6032		1-249-417-11	CARBON 1K 5% 1/4W	
R6033		1-215-481-00	METAL 330K 1% 1/4W	
R6034		1-249-389-11	CARBON 4.7 5% 1/4W	
R6035		1-260-083-11	CARBON 47 5% 1/2W	
R6036		1-216-817-11	RES-CHIP 470 5% 1/10W	
R6037		1-249-405-11	CARBON 100 5% 1/4W	
R6038		1-208-830-11	METAL CHIP 100K 0.5% 1/10W	
R6039		1-208-830-11	METAL CHIP 100K 0.5% 1/10W	
R6040		1-208-814-91	METAL CHIP 22K 0.5% 1/10W	

Note : The components identified by shading and marked ⚠ are critical for safety. Replace only with the part numbers specified in the parts list.

G **M**

REF.NO.	PART.NO	DESCRIPTION	REMARK
R6042	1-216-295-91	SHORT CHIP 0	
R6045	1-216-639-11	METAL CHIP 330 0.5% 1/10W	
R6047	1-208-842-11	METAL CHIP 330K 0.5% 1/10W	
R6048	1-215-481-00	METAL 330K 1% 1/4W	
R6049	1-208-805-11	METAL CHIP 9.1K 0.5% 1/10W	
R6050	1-208-758-11	METAL CHIP 100 0.5% 1/10W	
R6054	1-216-615-11	METAL CHIP 33 0.5% 1/10W	
R6056	1-216-295-91	SHORT CHIP 0	
R6057	1-208-798-11	METAL CHIP 4.7K 0.5% 1/10W	
R6101	1-216-821-11	RES-CHIP 1K 5% 1/10W	
R6102	1-216-829-11	RES-CHIP 4.7K 5% 1/10W	
R6103	1-216-821-11	RES-CHIP 1K 5% 1/10W	
R6104	1-216-821-11	RES-CHIP 1K 5% 1/10W	
R6105	1-216-821-11	RES-CHIP 1K 5% 1/10W	
R6106	1-216-829-11	RES-CHIP 4.7K 5% 1/10W	
R6107	1-216-829-11	RES-CHIP 4.7K 5% 1/10W	
R6108	1-216-821-11	RES-CHIP 1K 5% 1/10W	
R6109	1-216-829-11	RES-CHIP 4.7K 5% 1/10W	
R6110	1-216-821-11	RES-CHIP 1K 5% 1/10W	
		< RELAY >	
RY6001 ⚠	1-755-395-11	RELAY (AC POWER)	
RY6002 ⚠	1-755-389-11	RELAY (AC POWER)	
		< TRANSFORMER >	
T6002 ⚠	1-437-443-11	TRANSFORMER, CONVERTER (PIT)	
T6003 ⚠	1-424-896-11	TRANSFORMER, LINE FILTER	
T6101 ⚠	1-437-483-11	TRANSFORMER, STANDBY	
		< THERMISTOR >	
TH6002 ⚠	1-804-650-11	THERMISTOR, POSITIVE	

* A-1300-531-A COMPLETE PC BOARD, M

REF.NO.	PART.NO	DESCRIPTION	REMARK
		< CAPACITOR >	
C0001	1-107-826-11	CERAMIC CHIP 0.1UF	10.00% 16V
C0002	1-107-826-11	CERAMIC CHIP 0.1UF	10.00% 16V
C0004	1-165-128-11	CERAMIC CHIP 0.22UF	16V
C0006	1-126-947-11	ELECT 47UF	20.00% 35V
C0007	1-107-826-11	CERAMIC CHIP 0.1UF	10.00% 16V
C0008	1-107-826-11	CERAMIC CHIP 0.1UF	10.00% 16V
C0009	1-165-128-11	CERAMIC CHIP 0.22UF	16V
C0010	1-162-927-11	CERAMIC CHIP 100PF	5.00% 50V
C0011	1-165-128-11	CERAMIC CHIP 0.22UF	16V
C0012	1-162-924-11	CERAMIC CHIP 56PF	5.00% 50V
C0013	1-165-128-11	CERAMIC CHIP 0.22UF	16V
C0015	1-135-834-91	CERAMIC CHIP 2.2E+06PF	6.3V
C0016	1-165-128-11	CERAMIC CHIP 0.22UF	16V
C0017	1-162-924-11	CERAMIC CHIP 56PF	5.00% 50V
C0019	1-165-128-11	CERAMIC CHIP 0.22UF	16V
C0020	1-162-923-11	CERAMIC CHIP 47PF	5.00% 50V
C0025	1-162-962-11	CERAMIC CHIP 470PF	10.00% 50V
C0026	1-162-962-11	CERAMIC CHIP 470PF	10.00% 50V
C0027	1-162-962-11	CERAMIC CHIP 470PF	10.00% 50V
C0028	1-126-947-11	ELECT 47UF	20.00% 35V
		< CONNECTOR >	
CN0001	1-793-497-11	CONNECTOR, BOARD TO BOARD 40P	
		< DIODE >	
D0001	6-500-079-01	DIODE BAS40-05E6327	
D0301	8-719-069-56	DIODE UDZSTE-176.2B	
		< FERRITE BEAD >	
FB0003	1-216-295-91	SHORT CHIP 0	
FB0004	1-412-006-31	INDUCTOR 10UH	
FB0005	1-216-864-11	SHORT CHIP 0	
FB0006	1-216-864-11	SHORT CHIP 0	
FB0007	1-216-295-91	SHORT CHIP 0	
FB0008	1-216-295-91	SHORT CHIP 0	
FB0009	1-412-006-31	INDUCTOR 10UH	
FB0010	1-216-295-91	SHORT CHIP 0	
FB0011	1-412-006-31	INDUCTOR 10UH	
FB0012	1-216-295-91	SHORT CHIP 0	
FB0015	1-216-864-11	SHORT CHIP 0	
FB0016	1-216-864-11	SHORT CHIP 0	
FB0017	1-216-295-91	SHORT CHIP 0	
FB0018	1-216-295-91	SHORT CHIP 0	
FB0019	1-216-295-91	SHORT CHIP 0	
FB0020	1-216-295-91	SHORT CHIP 0	
		< IC >	
IC0001	8-759-699-33	IC M24C16-MN6T(A)	
IC0002	6-702-516-01	IC SAA5665HL/M1D/0710	
IC0003	8-759-672-39	IC PST573IMT	
IC0004	8-759-665-11	IC LM393DT	
IC0005	6-702-395-01	IC K6F2008V2E-YF70T	
		< TRANSISTOR >	
Q0002	8-729-424-08	TRANSISTOR UN2111	
Q0003	8-729-424-08	TRANSISTOR UN2111	
Q0006	8-729-010-29	TRANSISTOR MSD601-RST1	
Q0007	8-729-027-44	TRANSISTOR DTC114TKA-T146	
Q0008	8-729-027-44	TRANSISTOR DTC114TKA-T146	
Q0009	8-729-027-44	TRANSISTOR DTC114TKA-T146	
Q0010	8-729-027-44	TRANSISTOR DTC114TKA-T146	
Q0011	8-729-010-29	TRANSISTOR MSD601-RST1	
Q0012	8-729-424-08	TRANSISTOR UN2111	
Q0013	8-729-421-22	TRANSISTOR UN2211	

REF.NO.	PART.NO	DESCRIPTION			REMARK
		< RESISTOR >			
R0001	1-216-045-00	RES-CHIP	680	5%	1/10W
R0002	1-216-055-00	RES-CHIP	1.8K	5%	1/10W
R0003	1-216-025-11	RES-CHIP	100	5%	1/10W
R0011	1-216-025-11	RES-CHIP	100	5%	1/10W
R0014	1-216-081-00	RES-CHIP	22K	5%	1/10W
R0016	1-216-025-11	RES-CHIP	100	5%	1/10W
R0017	1-216-093-91	RES-CHIP	68K	5%	1/10W
R0018	1-216-025-11	RES-CHIP	100	5%	1/10W
R0019	1-216-073-91	RES-CHIP	10K	5%	1/10W
R0020	1-216-049-11	RES-CHIP	1K	5%	1/10W
R0022	1-216-809-11	RES-CHIP	100	5%	1/10W
R0023	1-216-097-11	RES-CHIP	100K	5%	1/10W
R0027	1-216-821-11	RES-CHIP	1K	5%	1/10W
R0028	1-216-833-11	RES-CHIP	10K	5%	1/10W
R0029	1-216-025-11	RES-CHIP	100	5%	1/10W
R0030	1-216-025-11	RES-CHIP	100	5%	1/10W
R0032	1-216-809-11	RES-CHIP	100	5%	1/10W
R0033	1-216-809-11	RES-CHIP	100	5%	1/10W
R0034	1-218-725-11	METAL CHIP	24K	0.5%	1/16W
R0035	1-216-069-00	RES-CHIP	6.8K	5%	1/10W
R0037	1-216-061-91	RES-CHIP	3.3K	5%	1/10W
R0039	1-216-809-11	RES-CHIP	100	5%	1/10W
R0040	1-216-809-11	RES-CHIP	100	5%	1/10W
R0041	1-216-057-00	RES-CHIP	2.2K	5%	1/10W
R0042	1-216-069-00	RES-CHIP	6.8K	5%	1/10W
R0043	1-216-803-11	RES-CHIP	33	5%	1/10W
R0044	1-216-025-11	RES-CHIP	100	5%	1/10W
R0045	1-216-803-11	RES-CHIP	33	5%	1/10W
R0046	1-216-803-11	RES-CHIP	33	5%	1/10W
R0047	1-216-810-11	RES-CHIP	120	5%	1/10W
R0048	1-216-809-11	RES-CHIP	100	5%	1/10W
R0049	1-216-073-91	RES-CHIP	10K	5%	1/10W
R0050	1-216-810-11	RES-CHIP	120	5%	1/10W
R0051	1-216-835-11	RES-CHIP	15K	5%	1/10W
R0052	1-216-810-11	RES-CHIP	120	5%	1/10W
R0053	1-216-809-11	RES-CHIP	100	5%	1/10W
R0054	1-216-809-11	RES-CHIP	100	5%	1/10W
R0055	1-216-809-11	RES-CHIP	100	5%	1/10W
R0056	1-216-833-11	RES-CHIP	10K	5%	1/10W
R0057	1-216-809-11	RES-CHIP	100	5%	1/10W
R0058	1-216-823-11	RES-CHIP	1.5K	5%	1/10W
R0059	1-216-841-11	RES-CHIP	47K	5%	1/10W
R0060	1-216-833-11	RES-CHIP	10K	5%	1/10W
R0061	1-216-833-11	RES-CHIP	10K	5%	1/10W
R0062	1-216-833-11	RES-CHIP	10K	5%	1/10W
R0063	1-216-073-91	RES-CHIP	10K	5%	1/10W
R0065	1-216-073-91	RES-CHIP	10K	5%	1/10W
R0066	1-218-871-11	METAL CHIP	10K	0.5%	1/10W
R0067	1-216-833-11	RES-CHIP	10K	5%	1/10W
R0068	1-216-833-11	RES-CHIP	10K	5%	1/10W
R0069	1-216-073-91	RES-CHIP	10K	5%	1/10W
R0070	1-216-025-11	RES-CHIP	100	5%	1/10W
R0071	1-216-809-11	RES-CHIP	100	5%	1/10W
R0072	1-216-809-11	RES-CHIP	100	5%	1/10W
R0073	1-216-809-11	RES-CHIP	100	5%	1/10W
R0074	1-216-809-11	RES-CHIP	100	5%	1/10W
R0075	1-216-025-11	RES-CHIP	100	5%	1/10W
R0076	1-216-049-11	RES-CHIP	1K	5%	1/10W
R0078	1-216-817-11	RES-CHIP	470	5%	1/10W
R0079	1-216-065-91	RES-CHIP	4.7K	5%	1/10W
R0301	1-216-073-91	RES-CHIP	10K	5%	1/10W
R0302	1-216-073-91	RES-CHIP	10K	5%	1/10W
R0303	1-216-836-11	RES-CHIP	18K	5%	1/10W
R0304	1-218-867-11	METAL CHIP	6.8K	0.5%	1/10W
		< CRYSTAL >			
X0001	1-578-774-71	VIBRATOR, CRYSTAL			

*** A-1300-545-A COMPLETE PC BOARD, C**

	4-382-854-01	SCREW (M3X8), P, SW (+)			
		< CAPACITOR >			
C7303	1-162-909-11	CERAMIC CHIP	4PF	0.25PF	50V
C7305	1-136-207-11	MYLAR	0.047UF	5.00%	630V
C7306	1-163-009-91	CERAMIC CHIP	0.001UF	10.00%	50V
C7308	1-162-909-11	CERAMIC CHIP	4PF	0.25PF	50V
C7309	1-163-035-00	CERAMIC CHIP	0.047UF		50V
C7310	1-163-247-91	CERAMIC CHIP	68PF	5.00%	50V
C7325	1-162-909-11	CERAMIC CHIP	4PF	0.25PF	50V
C7326	1-163-009-91	CERAMIC CHIP	0.001UF	10.00%	50V
C7330	1-136-207-11	MYLAR	0.047UF	5.00%	630V
C7331	1-162-909-11	CERAMIC CHIP	4PF	0.25PF	50V
C7333	1-163-035-00	CERAMIC CHIP	0.047UF		50V
C7334	1-163-247-91	CERAMIC CHIP	68PF	5.00%	50V
C7350	1-126-947-11	ELECT	47UF	20.00%	35V
C7351	1-162-909-11	CERAMIC CHIP	4PF	0.25PF	50V
C7352	1-163-009-91	CERAMIC CHIP	0.001UF	10.00%	50V
C7354	1-126-933-11	ELECT	100UF	20.00%	16V
C7355	1-107-967-11	ELECT	1UF	20.00%	400V
C7356	1-136-207-11	MYLAR	0.047UF	5.00%	630V
C7358	1-162-909-11	CERAMIC CHIP	4PF	0.25PF	50V
C7359	1-163-035-00	CERAMIC CHIP	0.047UF		50V
C7360	1-163-247-91	CERAMIC CHIP	68PF	5.00%	50V
C7378	1-162-116-00	CERAMIC	680PF	10.00%	2KV
C7379	1-162-114-00	CERAMIC	0.0047UF		2KV
C7380	1-107-662-11	ELECT	22UF	20.00%	350V
C7384	1-162-911-11	CERAMIC CHIP	6PF	0.50PF	50V

Note : The components identified by shading and marked ⚠ are critical for safety. Replace only with the part numbers specified in the parts list.

C A

REF.NO.		PART.NO	DESCRIPTION			REMARK
C7385		1-162-913-11	CERAMIC CHIP	8PF		0.50PF 50V
C7387		1-162-911-11	CERAMIC CHIP	6PF		0.50PF 50V
C7388		1-162-913-11	CERAMIC CHIP	8PF		0.50PF 50V
C7390		1-162-911-11	CERAMIC CHIP	6PF		0.50PF 50V
C7391		1-162-913-11	CERAMIC CHIP	8PF		0.50PF 50V
		< CONNECTOR >				
CN7300	*	1-564-508-11	PLUG, CONNECTOR	5P		
CN7301	*	1-564-512-11	PLUG, CONNECTOR	9P		
CN7311		1-695-915-11	TAB (CONTACT)			
CN7333		1-695-915-11	TAB (CONTACT)			
		< DIODE >				
D7300		8-719-911-19	DIODE 1SS119-25			
D7325		8-719-911-19	DIODE 1SS119-25			
D7350		8-719-911-19	DIODE 1SS119-25			
D7378		8-719-109-89	DIODE RD5.6ESB2			
D7379		8-719-109-89	DIODE RD5.6ESB2			
D7380		8-719-302-43	DIODE EL1Z			
D7381		8-719-302-43	DIODE EL1Z			
D7382		8-719-302-43	DIODE EL1Z			
		< IC >				
IC7300		8-759-360-83	IC TDA6111Q/N4			
IC7325		8-759-360-83	IC TDA6111Q/N4			
IC7350		8-759-360-83	IC TDA6111Q/N4			
		< SOCKET >				
J7375	⚠	1-251-732-11	SOCKET, CRT			
		< COIL >				
L7375		1-410-671-31	INDUCTOR	47UH		
L7376	⚠	1-532-637-00	LINK, IC	1.0A		ICP-F25
L7378		1-414-934-21	INDUCTOR	10UH		
		< TRANSISTOR >				
Q7350		8-729-901-06	TRANSISTOR DTA144EK			
Q7352		8-729-421-19	TRANSISTOR UN2213			
Q7353		8-729-421-19	TRANSISTOR UN2213			
Q7354		8-729-901-06	TRANSISTOR DTA144EK			
Q7355		8-729-421-19	TRANSISTOR UN2213			
		< RESISTOR >				
R7300		1-249-417-11	CARBON	1K	5%	1/4W
R7303		1-216-824-11	RES-CHIP	1.8K	5%	1/10W
R7304		1-260-095-11	CARBON	470	5%	1/2W
R7305		1-215-903-11	METAL OXIDE	68K	5%	2W
R7309		1-216-824-11	RES-CHIP	1.8K	5%	1/10W
R7310		1-216-819-11	RES-CHIP	680	5%	1/10W
R7325		1-249-417-11	CARBON	1K	5%	1/4W

REF.NO.	PART.NO	DESCRIPTION			REMARK
R7328	1-216-824-11	RES-CHIP	1.8K	5%	1/10W
R7329	1-260-095-11	CARBON	470	5%	1/2W
R7330	1-215-903-11	METAL OXIDE	68K	5%	2W
R7334	1-216-819-11	RES-CHIP	680	5%	1/10W
R7335	1-216-824-11	RES-CHIP	1.8K	5%	1/10W
R7350	1-249-417-11	CARBON	1K	5%	1/4W
R7356	1-216-824-11	RES-CHIP	1.8K	5%	1/10W
R7357	1-260-095-11	CARBON	470	5%	1/2W
R7358	1-215-903-11	METAL OXIDE	68K	5%	2W
R7363	1-216-819-11	RES-CHIP	680	5%	1/10W
R7364	1-216-824-11	RES-CHIP	1.8K	5%	1/10W
R7373	1-216-823-11	RES-CHIP	1.5K	5%	1/10W
R7374	1-216-819-11	RES-CHIP	680	5%	1/10W
R7375	1-249-435-11	CARBON	33K	5%	1/4W
R7379	1-216-833-11	RES-CHIP	10K	5%	1/10W
R7380	1-216-833-11	RES-CHIP	10K	5%	1/10W
R7381	1-216-833-11	RES-CHIP	10K	5%	1/10W
R7383	1-216-349-00	METAL OXIDE	1	5%	1W
R7385	1-202-549-00	SOLID	100	20%	1/2W
R7387	1-247-735-11	CARBON	47	5%	1/2W
R7389	1-247-881-00	CARBON	120K	5%	1/4W
R7390	1-249-417-11	CARBON	1K	5%	1/4W
R7391	1-216-824-11	RES-CHIP	1.8K	5%	1/10W
R7392	1-216-819-11	RES-CHIP	680	5%	1/10W
R7393	1-216-823-11	RES-CHIP	1.5K	5%	1/10W
R7394	1-249-417-11	CARBON	1K	5%	1/4W
R7395	1-216-824-11	RES-CHIP	1.8K	5%	1/10W
R7396	1-216-819-11	RES-CHIP	680	5%	1/10W
R7397	1-216-823-11	RES-CHIP	1.5K	5%	1/10W
R7398	1-249-417-11	CARBON	1K	5%	1/4W
R7399	1-216-824-11	RES-CHIP	1.8K	5%	1/10W
	< RESISTOR VARIABLE >				
RV7375	1-241-656-11	RES, ADJ, METAL FILM	110M		

* A-1300-546-A COMPLETE PC BOARD, A

	4-382-854-01	SCREW (M3X8), P, SW (+)		
	< CAPACITOR >			
C1001	1-126-933-11	ELECT	100UF	20.00% 16V
C1002	1-126-964-11	ELECT	10UF	20.00% 50V
C1004	1-163-021-91	CERAMIC CHIP	0.01UF	10.00% 50V
C1006	1-126-933-11	ELECT	100UF	20.00% 16V
C1008	1-163-021-91	CERAMIC CHIP	0.01UF	10.00% 50V
C1009	1-162-925-11	CERAMIC CHIP	68PF	5.00% 50V
C1010	1-162-925-11	CERAMIC CHIP	68PF	5.00% 50V
C1014	1-126-933-11	ELECT	100UF	20.00% 16V
C1015	1-163-021-91	CERAMIC CHIP	0.01UF	10.00% 50V
C1018	1-115-340-11	CERAMIC CHIP	0.22UF	10.00% 25V

REF.NO.	PART.NO	DESCRIPTION	REMARK
C1020	1-164-004-11	CERAMIC CHIP 0.1UF	10.00% 25V
C1021	1-162-968-11	CERAMIC CHIP 0.0047UF	10.00% 50V
C1022	1-216-295-91	SHORT CHIP 0	
C2000	1-162-968-11	CERAMIC CHIP 0.0047UF	10.00% 50V
C2001	1-162-968-11	CERAMIC CHIP 0.0047UF	10.00% 50V
C2006	1-162-962-11	CERAMIC CHIP 470PF	10.00% 50V
C2007	1-163-021-91	CERAMIC CHIP 0.01UF	10.00% 50V
C2008	1-162-964-11	CERAMIC CHIP 0.001UF	10.00% 50V
C2009	1-163-021-91	CERAMIC CHIP 0.01UF	10.00% 50V
C2010	1-162-964-11	CERAMIC CHIP 0.001UF	10.00% 50V
C2011	1-162-962-11	CERAMIC CHIP 470PF	10.00% 50V
C2012	1-162-962-11	CERAMIC CHIP 470PF	10.00% 50V
C2013	1-162-962-11	CERAMIC CHIP 470PF	10.00% 50V
C2014	1-164-346-11	CERAMIC CHIP 1UF	16V
C2015	1-163-021-91	CERAMIC CHIP 0.01UF	10.00% 50V
C2016	1-162-962-11	CERAMIC CHIP 470PF	10.00% 50V
C2018	1-162-962-11	CERAMIC CHIP 470PF	10.00% 50V
C2019	1-164-346-11	CERAMIC CHIP 1UF	16V
C2021	1-162-962-11	CERAMIC CHIP 470PF	10.00% 50V
C2022	1-162-966-11	CERAMIC CHIP 0.0022UF	10.00% 50V
C2023	1-162-966-11	CERAMIC CHIP 0.0022UF	10.00% 50V
C2024	1-164-346-11	CERAMIC CHIP 1UF	16V
C2026	1-162-962-11	CERAMIC CHIP 470PF	10.00% 50V
C2027	1-126-947-11	ELECT 47UF	20.00% 35V
C2028	1-126-947-11	ELECT 47UF	20.00% 35V
C2029	1-164-346-11	CERAMIC CHIP 1UF	16V
C2031	1-162-962-11	CERAMIC CHIP 470PF	10.00% 50V
C2034	1-164-346-11	CERAMIC CHIP 1UF	16V
C2035	1-164-346-11	CERAMIC CHIP 1UF	16V
C2038	1-162-970-11	CERAMIC CHIP 0.01UF	10.00% 25V
C2039	1-162-906-11	CERAMIC CHIP 1.5PF	0.25PF 50V
C2040	1-162-964-11	CERAMIC CHIP 0.001UF	10.00% 50V
C2041	1-162-906-11	CERAMIC CHIP 1.5PF	0.25PF 50V
C2042	1-216-864-11	SHORT CHIP 0	
C2043	1-162-962-11	CERAMIC CHIP 470PF	10.00% 50V
C2044	1-163-021-91	CERAMIC CHIP 0.01UF	10.00% 50V
C2046	1-162-923-11	CERAMIC CHIP 47PF	5.00% 50V
C2047	1-162-927-11	CERAMIC CHIP 100PF	5.00% 50V
C2048	1-126-947-11	ELECT 47UF	20.00% 35V
C2049	1-162-925-11	CERAMIC CHIP 68PF	5.00% 50V
C2050	1-107-823-11	CERAMIC CHIP 0.47UF	10.00% 16V
C2051	1-126-964-11	ELECT 10UF	20.00% 50V
C2052	1-164-004-11	CERAMIC CHIP 0.1UF	10.00% 25V
C2053	1-164-227-11	CERAMIC CHIP 0.022UF	10.00% 25V
C2054	1-126-947-11	ELECT 47UF	20.00% 35V
C2055	1-162-968-11	CERAMIC CHIP 0.0047UF	10.00% 50V
C2057	1-126-964-11	ELECT 10UF	20.00% 50V
C2058	1-164-004-11	CERAMIC CHIP 0.1UF	10.00% 25V
C2059	1-126-964-11	ELECT 10UF	20.00% 50V
C2060	1-126-947-11	ELECT 47UF	20.00% 35V
C2061	1-162-968-11	CERAMIC CHIP 0.0047UF	10.00% 50V
C2062	1-164-346-11	CERAMIC CHIP 1UF	16V
C2063	1-164-346-11	CERAMIC CHIP 1UF	16V
C2064	1-126-964-11	ELECT 10UF	20.00% 50V
C2065	1-162-966-11	CERAMIC CHIP 0.0022UF	10.00% 50V
C2066	1-162-966-11	CERAMIC CHIP 0.0022UF	10.00% 50V
C2069	1-127-715-91	CERAMIC CHIP 0.22UF	10% 16V
C2073	1-126-960-11	ELECT 1UF	20.00% 50V
C2074	1-126-960-11	ELECT 1UF	20.00% 50V
C2075	1-126-960-11	ELECT 1UF	20.00% 50V
C2077	1-126-960-11	ELECT 1UF	20.00% 50V
C2078	1-126-963-11	ELECT 4.7UF	20.00% 50V
C2079	1-164-004-11	CERAMIC CHIP 0.1UF	10.00% 25V
C2080	1-162-927-11	CERAMIC CHIP 100PF	5.00% 50V
C2081	1-162-928-11	CERAMIC CHIP 120PF	5.00% 50V
C2082	1-216-864-11	SHORT CHIP 0	
C2083	1-162-964-11	CERAMIC CHIP 0.001UF	10.00% 50V
C2084	1-162-962-11	CERAMIC CHIP 470PF	10.00% 50V
C2085	1-163-021-91	CERAMIC CHIP 0.01UF	10.00% 50V
C2086	1-162-964-11	CERAMIC CHIP 0.001UF	10.00% 50V
C2087	1-163-021-91	CERAMIC CHIP 0.01UF	10.00% 50V
C2088	1-162-964-11	CERAMIC CHIP 0.001UF	10.00% 50V
C2089	1-162-962-11	CERAMIC CHIP 470PF	10.00% 50V
C2090	1-126-947-11	ELECT 47UF	20.00% 35V
C2091	1-126-947-11	ELECT 47UF	20.00% 35V
C2092	1-126-947-11	ELECT 47UF	20.00% 35V
C2093	1-126-947-11	ELECT 47UF	20.00% 35V
C2094	1-126-947-11	ELECT 47UF	20.00% 35V
C2095	1-126-947-11	ELECT 47UF	20.00% 35V
C2096	1-162-970-11	CERAMIC CHIP 0.01UF	10.00% 25V
C2500	1-126-952-11	ELECT 1000UF	20.00% 35V
C2502	1-104-666-11	ELECT 220UF	20.00% 25V
C2504	1-164-222-91	CERAMIC CHIP 0.22UF	25V
C2505	1-115-339-11	CERAMIC CHIP 0.1UF	10.00% 50V
C2506	1-126-972-11	ELECT 1000UF	20.00% 50V
C2507	1-164-230-11	CERAMIC CHIP 220PF	5.00% 50V
C2508	1-164-230-11	CERAMIC CHIP 220PF	5.00% 50V
C2509	1-164-230-11	CERAMIC CHIP 220PF	5.00% 50V
C2510	1-164-227-11	CERAMIC CHIP 0.022UF	10.00% 25V
C2511	1-163-021-91	CERAMIC CHIP 0.01UF	10.00% 50V
C2512	1-163-021-91	CERAMIC CHIP 0.01UF	10.00% 50V
C2513	1-126-952-11	ELECT 1000UF	20.00% 35V
C2515	1-164-227-11	CERAMIC CHIP 0.022UF	10.00% 25V
C2516	1-126-953-11	ELECT 2200UF	20.00% 35V
C2517	1-126-960-11	ELECT 1UF	20.00% 50V
C2518	1-126-960-11	ELECT 1UF	20.00% 50V
C2519	1-126-959-11	ELECT 0.47UF	20.00% 50V
C2521	1-164-489-11	CERAMIC CHIP 0.22UF	10.00% 16V
C2523	1-115-339-11	CERAMIC CHIP 0.1UF	10.00% 50V
C3200	1-126-964-11	ELECT 10UF	20.00% 50V

REF.NO.	PART.NO	DESCRIPTION	REMARK
C3202	1-126-964-11	ELECT 10UF	20.00% 50V
C3203	1-126-964-11	ELECT 10UF	20.00% 50V
C3206	1-126-964-11	ELECT 10UF	20.00% 50V
C3208	1-163-235-11	CERAMIC CHIP 22PF	5.00% 50V
C3209	1-163-235-11	CERAMIC CHIP 22PF	5.00% 50V
C3210	1-126-964-11	ELECT 10UF	20.00% 50V
C3211	1-126-964-11	ELECT 10UF	20.00% 50V
C3213	1-164-222-91	CERAMIC CHIP 0.22UF	25V
C3214	1-164-222-91	CERAMIC CHIP 0.22UF	25V
C3215	1-164-222-91	CERAMIC CHIP 0.22UF	25V
C3216	1-164-222-91	CERAMIC CHIP 0.22UF	25V
C3217	1-164-222-91	CERAMIC CHIP 0.22UF	25V
C3218	1-164-222-91	CERAMIC CHIP 0.22UF	25V
C3219	1-164-222-91	CERAMIC CHIP 0.22UF	25V
C3220	1-164-222-91	CERAMIC CHIP 0.22UF	25V
C3221	1-164-222-91	CERAMIC CHIP 0.22UF	25V
C3222	1-164-222-91	CERAMIC CHIP 0.22UF	25V
C3223	1-164-222-91	CERAMIC CHIP 0.22UF	25V
C3224	1-164-222-91	CERAMIC CHIP 0.22UF	25V
C3225	1-164-222-91	CERAMIC CHIP 0.22UF	25V
C3226	1-164-222-91	CERAMIC CHIP 0.22UF	25V
C3227	1-164-222-91	CERAMIC CHIP 0.22UF	25V
C3228	1-164-489-11	CERAMIC CHIP 0.22UF	10.00% 16V
C3229	1-164-489-11	CERAMIC CHIP 0.22UF	10.00% 16V
C3230	1-164-489-11	CERAMIC CHIP 0.22UF	10.00% 16V
C3231	1-164-489-11	CERAMIC CHIP 0.22UF	10.00% 16V
C3232	1-164-489-11	CERAMIC CHIP 0.22UF	10.00% 16V
C3233	1-164-489-11	CERAMIC CHIP 0.22UF	10.00% 16V
C3234	1-164-489-11	CERAMIC CHIP 0.22UF	10.00% 16V
C3235	1-165-176-11	CERAMIC CHIP 0.047UF	10.00% 16V
C3236	1-165-176-11	CERAMIC CHIP 0.047UF	10.00% 16V
C3237	1-165-176-11	CERAMIC CHIP 0.047UF	10.00% 16V
C3238	1-165-176-11	CERAMIC CHIP 0.047UF	10.00% 16V
C3239	1-165-176-11	CERAMIC CHIP 0.047UF	10.00% 16V
C3240	1-165-176-11	CERAMIC CHIP 0.047UF	10.00% 16V
C3241	1-126-933-11	ELECT 100UF	20.00% 16V
C3242	1-162-970-11	CERAMIC CHIP 0.01UF	10.00% 25V
C3243	1-164-222-91	CERAMIC CHIP 0.22UF	25V
C3245	1-163-251-11	CERAMIC CHIP 100PF	5.00% 50V
C3250	1-163-021-91	CERAMIC CHIP 0.01UF	10.00% 50V
C3300	1-163-251-11	CERAMIC CHIP 100PF	5.00% 50V
C3309	1-126-964-11	ELECT 10UF	20.00% 50V
C3310	1-164-222-91	CERAMIC CHIP 0.22UF	25V
C5103	1-126-960-11	ELECT 1UF	20.00% 50V
C5106	1-126-933-11	ELECT 100UF	20.00% 16V
C5109	1-126-964-11	ELECT 10UF	20.00% 50V
C5110	1-126-947-11	ELECT 47UF	20.00% 35V
C5111	1-126-964-11	ELECT 10UF	20.00% 50V
C5112	1-126-964-11	ELECT 10UF	20.00% 50V
C5114	1-164-156-11	CERAMIC CHIP 0.1UF	25V
C5115	1-126-964-11	ELECT 10UF	20.00% 50V
C5117	1-126-964-11	ELECT 10UF	20.00% 50V
C5118	1-164-156-11	CERAMIC CHIP 0.1UF	25V
C5119	1-107-823-11	CERAMIC CHIP 0.47UF	10.00% 16V
C5120	1-165-176-11	CERAMIC CHIP 0.047UF	10.00% 16V
C5121	1-165-176-11	CERAMIC CHIP 0.047UF	10.00% 16V
C5122	1-164-156-11	CERAMIC CHIP 0.1UF	25V
C5123	1-126-964-11	ELECT 10UF	20.00% 50V
C5124	1-164-156-11	CERAMIC CHIP 0.1UF	25V
C5125	1-126-964-11	ELECT 10UF	20.00% 50V
C5300	1-126-933-11	ELECT 100UF	20.00% 16V
C5301	1-126-947-11	ELECT 47UF	20.00% 35V
C5302	1-164-222-91	CERAMIC CHIP 0.22UF	25V
C5303	1-136-153-00	FILM 0.01UF	5.00% 50V
C5304	1-164-182-11	CERAMIC CHIP 0.0033UF	10.00% 50V
C5305	1-165-176-11	CERAMIC CHIP 0.047UF	10.00% 16V
C5306	1-164-156-11	CERAMIC CHIP 0.1UF	25V
C5307	1-164-156-11	CERAMIC CHIP 0.1UF	25V
C5309	1-162-927-11	CERAMIC CHIP 100PF	5.00% 50V
C5310	1-136-165-00	FILM 0.1UF	5.00% 50V
C5311	1-164-156-11	CERAMIC CHIP 0.1UF	25V
C5312	1-165-176-11	CERAMIC CHIP 0.047UF	10.00% 16V
C5313	1-107-714-11	ELECT 10UF	20.00% 50V
C5314	1-162-970-11	CERAMIC CHIP 0.01UF	10.00% 25V
C5316	1-164-230-11	CERAMIC CHIP 220PF	5.00% 50V
C5318	1-164-156-11	CERAMIC CHIP 0.1UF	25V
C5319	1-136-347-11	FILM 0.0047UF	5.00% 630V
C5320	1-129-716-00	FILM 0.015UF	5.00% 630V
C5321	1-136-347-11	FILM 0.0047UF	5.00% 630V
C5322	1-164-156-11	CERAMIC CHIP 0.1UF	25V
C5323	1-136-159-00	FILM 0.033UF	5.00% 50V
C5400	1-126-964-11	ELECT 10UF	20.00% 50V
C5401	1-107-714-11	ELECT 10UF	20.00% 50V
C5403	1-128-527-11	ELECT 330UF	20.00% 25V
C5404	1-102-228-00	CERAMIC 470PF	10.00% 500V
C5405	1-163-021-91	CERAMIC CHIP 0.01UF	10.00% 50V
C5406	1-129-702-00	MYLAR 0.001UF	10.00% 400V
C5407	1-128-527-11	ELECT 330UF	20.00% 25V
C5409	1-126-968-11	ELECT 100UF	20.00% 50V
C5410	1-163-021-91	CERAMIC CHIP 0.01UF	10.00% 50V
C5411	1-137-401-11	MYLAR 0.22UF	5.00% 100V
C5412	1-106-220-00	MYLAR 0.1UF	10.00% 100V
C5413	1-130-785-11	MYLAR 0.47UF	5.00% 100V
C5414	1-126-964-11	ELECT 10UF	20.00% 50V
C5801	1-126-963-11	ELECT 4.7UF	20.00% 50V
C5850	1-126-963-11	ELECT 4.7UF	20.00% 50V
C5851	1-107-826-11	CERAMIC CHIP 0.1UF	10.00% 16V
C5853	1-162-970-11	CERAMIC CHIP 0.01UF	10.00% 25V
C5854	1-107-826-11	CERAMIC CHIP 0.1UF	10.00% 16V
C5858	1-107-826-11	CERAMIC CHIP 0.1UF	10.00% 16V

REF.NO.	PART.NO	DESCRIPTION	REMARK
C5859	1-126-960-11	ELECT 1UF	20.00% 50V
C5860	1-165-176-11	CERAMIC CHIP 0.047UF	10.00% 16V
C5868	1-164-004-11	CERAMIC CHIP 0.1UF	10.00% 25V
C5872	1-164-346-11	CERAMIC CHIP 1UF	16V
C5873	1-163-251-11	CERAMIC CHIP 100PF	5.00% 50V
C5888	1-164-156-11	CERAMIC CHIP 0.1UF	25V
C5889	1-126-964-11	ELECT 10UF	20.00% 50V
C5890	1-164-227-11	CERAMIC CHIP 0.022UF	10.00% 25V
C5891	1-137-581-11	FILM 0.1UF	5.00% 100V
C5892	1-107-826-11	CERAMIC CHIP 0.1UF	10.00% 16V
C5893	1-126-947-11	ELECT 47UF	20.00% 35V
C5894	1-126-947-11	ELECT 47UF	20.00% 35V
C5895	1-164-156-11	CERAMIC CHIP 0.1UF	25V
C5896	1-165-176-11	CERAMIC CHIP 0.047UF	10.00% 16V
C5897	1-162-970-11	CERAMIC CHIP 0.01UF	10.00% 25V
C5898	1-162-964-11	CERAMIC CHIP 0.001UF	10.00% 50V
C5899	1-107-823-11	CERAMIC CHIP 0.47UF	10.00% 16V
C6200	1-126-933-11	ELECT 100UF	20.00% 16V
C6201	1-126-935-11	ELECT 470UF	20.00% 16V
C6202	1-126-933-11	ELECT 100UF	20.00% 16V
C6203	1-126-935-11	ELECT 470UF	20.00% 16V
C6204	1-126-933-11	ELECT 100UF	20.00% 16V
C6205	1-126-935-11	ELECT 470UF	20.00% 16V
C6206	1-126-933-11	ELECT 100UF	20.00% 16V
C6207	1-126-933-11	ELECT 100UF	20.00% 16V
C6208	1-126-933-11	ELECT 100UF	20.00% 16V
C6209	1-126-933-11	ELECT 100UF	20.00% 16V
C6210	1-126-935-11	ELECT 470UF	20.00% 16V
C6211	1-126-947-11	ELECT 47UF	20.00% 35V
C6212	1-126-933-11	ELECT 100UF	20.00% 16V
C6213	1-126-933-11	ELECT 100UF	20.00% 16V
C6214	1-126-933-11	ELECT 100UF	20.00% 16V
C7002	1-126-947-11	ELECT 47UF	20.00% 35V
C7004	1-164-222-91	CERAMIC CHIP 0.22UF	25V
C7008	1-162-919-11	CERAMIC CHIP 22PF	5.00% 50V
C7016	1-107-823-11	CERAMIC CHIP 0.47UF	10.00% 16V
C7018	1-164-004-11	CERAMIC CHIP 0.1UF	10.00% 25V
C7019	1-164-004-11	CERAMIC CHIP 0.1UF	10.00% 25V
C7020	1-164-004-11	CERAMIC CHIP 0.1UF	10.00% 25V
C7021	1-164-004-11	CERAMIC CHIP 0.1UF	10.00% 25V
C7022	1-164-004-11	CERAMIC CHIP 0.1UF	10.00% 25V
C7023	1-164-004-11	CERAMIC CHIP 0.1UF	10.00% 25V
C7030	1-164-004-11	CERAMIC CHIP 0.1UF	10.00% 25V
C7031	1-164-004-11	CERAMIC CHIP 0.1UF	10.00% 25V
C7032	1-164-004-11	CERAMIC CHIP 0.1UF	10.00% 25V
C7038	1-107-823-11	CERAMIC CHIP 0.47UF	10.00% 16V
C7039	1-162-966-11	CERAMIC CHIP 0.0022UF	10.00% 50V
C7050	1-162-927-11	CERAMIC CHIP 100PF	5.00% 50V
C7051	1-164-004-11	CERAMIC CHIP 0.1UF	10.00% 25V
C7052	1-164-004-11	CERAMIC CHIP 0.1UF	10.00% 25V
C7053	1-164-004-11	CERAMIC CHIP 0.1UF	10.00% 25V
C7054	1-126-963-11	ELECT 4.7UF	20.00% 50V
C7055	1-164-222-91	CERAMIC CHIP 0.22UF	25V
C7056	1-126-933-11	ELECT 100UF	20.00% 16V
C7057	1-164-222-91	CERAMIC CHIP 0.22UF	25V
C7058	1-126-933-11	ELECT 100UF	20.00% 16V
C7059	1-126-933-11	ELECT 100UF	20.00% 16V
C7060	1-164-222-91	CERAMIC CHIP 0.22UF	25V
C7061	1-164-004-11	CERAMIC CHIP 0.1UF	10.00% 25V
C7062	1-164-004-11	CERAMIC CHIP 0.1UF	10.00% 25V
C7063	1-164-004-11	CERAMIC CHIP 0.1UF	10.00% 25V
C7064	1-126-947-11	ELECT 47UF	20.00% 35V
C7065	1-164-222-91	CERAMIC CHIP 0.22UF	25V
C7067	1-126-947-11	ELECT 47UF	20.00% 35V
C7068	1-164-222-91	CERAMIC CHIP 0.22UF	25V
C7069	1-162-919-11	CERAMIC CHIP 22PF	5.00% 50V
C7070	1-162-919-11	CERAMIC CHIP 22PF	5.00% 50V
C7071	1-162-919-11	CERAMIC CHIP 22PF	5.00% 50V
		< COATING LEAD >	
CLP6	* 4-042-408-01	PIN, COATING LEAD	
		< CONNECTOR >	
CN0101	1-823-330-11	CONNECTOR, BOARD TO BOARD 40P	
CN0102	* 1-564-520-11	PLUG, CONNECTOR 5P	
CN0103	* 1-564-507-11	PLUG, CONNECTOR 4P	
CN1000	1-770-130-11	CONNECTOR (SQUARE TYPE) 21P	
CN1001	1-766-296-21	CONNECTOR, DUAL SCART	
CN2000	* 1-564-512-11	PLUG, CONNECTOR 9P	
CN2500	* 1-564-506-11	PLUG, CONNECTOR 3P	
CN2501	* 1-564-507-11	PLUG, CONNECTOR 4P	
CN2502	* 1-564-509-11	PLUG, CONNECTOR 6P	
CN5002	* 1-564-510-11	PLUG, CONNECTOR 7P	
CN5100	* 1-564-506-11	PLUG, CONNECTOR 3P	
CN5801	1-764-333-11	PIN, CONNECTOR(PCB)(V TYPE)10P	
CN6200	* 1-564-507-11	PLUG, CONNECTOR 4P	
CN6202	* 1-564-516-11	PLUG, CONNECTOR 13P	
CN6203	1-695-915-11	TAB (CONTACT)	
CN7000	* 1-564-508-11	PLUG, CONNECTOR 5P	
CN7001	* 1-564-512-11	PLUG, CONNECTOR 9P	
CN8001	1-766-281-11	PIN, CONNECTOR (PC BOARD) 8P	
		< DIODE >	
D0101	8-719-921-88	DIODE MTZJ-13B	
D0104	8-719-109-89	DIODE RD5.6ESB2	
D0110	8-719-109-89	DIODE RD5.6ESB2	
D0111	8-719-929-15	DIODE HZS9.1NB2	
D0112	8-719-921-88	DIODE MTZJ-13B	
D0113	8-719-921-88	DIODE MTZJ-13B	

REF.NO.	PART.NO	DESCRIPTION	REMARK
D1006	8-719-109-89	DIODE RD5.6ESB2	
D2014	8-719-929-15	DIODE HZS9.1NB2	
D2015	8-719-929-15	DIODE HZS9.1NB2	
D2016	8-719-050-38	DIODE M1MA152WK-T1	
D2018	8-719-929-15	DIODE HZS9.1NB2	
D2019	8-719-929-15	DIODE HZS9.1NB2	
D2500	8-719-050-38	DIODE M1MA152WK-T1	
D2502	8-719-109-89	DIODE RD5.6ESB2	
D2503	8-719-050-38	DIODE M1MA152WK-T1	
D3001	8-719-929-15	DIODE HZS9.1NB2	
D3003	8-719-929-15	DIODE HZS9.1NB2	
D3005	8-719-929-15	DIODE HZS9.1NB2	
D3007	8-719-109-89	DIODE RD5.6ESB2	
D3008	8-719-109-89	DIODE RD5.6ESB2	
D3009	8-719-929-15	DIODE HZS9.1NB2	
D3011	8-719-929-15	DIODE HZS9.1NB2	
D3013	8-719-929-15	DIODE HZS9.1NB2	
D3015	8-719-929-15	DIODE HZS9.1NB2	
D3017	8-719-109-89	DIODE RD5.6ESB2	
D3018	8-719-109-89	DIODE RD5.6ESB2	
D3019	8-719-929-15	DIODE HZS9.1NB2	
D3021	8-719-929-15	DIODE HZS9.1NB2	
D3023	8-719-109-89	DIODE RD5.6ESB2	
D3024	8-719-929-15	DIODE HZS9.1NB2	
D3026	8-719-929-15	DIODE HZS9.1NB2	
D3028	8-719-929-15	DIODE HZS9.1NB2	
D3201	8-719-109-89	DIODE RD5.6ESB2	
D5101	8-719-050-38	DIODE M1MA152WK-T1	
D5103	8-719-110-86	DIODE RD39ESB	
D5104	8-719-109-89	DIODE RD5.6ESB2	
D5300	8-719-081-97	DIODE MMDL914T1	
D5303	8-719-081-97	DIODE MMDL914T1	
D5304	8-719-081-97	DIODE MMDL914T1	
D5305	8-719-991-33	DIODE 1SS133T-77	
D5306	8-719-302-43	DIODE EL1Z	
D5307	8-719-987-87	DIODE ERA85-009	
D5309	8-719-081-97	DIODE MMDL914T1	
D5310	8-719-081-97	DIODE MMDL914T1	
D5400	8-719-982-03	DIODE MTZJ-3.6A	
D5401	8-719-050-38	DIODE M1MA152WK-T1	
D5404	8-719-110-41	DIODE RD15ESB2	
D5405	8-719-908-03	DIODE GP08D	
D5406	8-719-081-97	DIODE MMDL914T1	
D5407	8-719-081-97	DIODE MMDL914T1	
D5804	8-719-109-89	DIODE RD5.6ESB2	
D5807	8-719-929-15	DIODE HZS9.1NB2	
D5809	8-719-050-38	DIODE M1MA152WK-T1	
D5811	8-719-081-97	DIODE MMDL914T1	
D5812	8-719-081-97	DIODE MMDL914T1	
D5813	8-719-081-97	DIODE MMDL914T1	
D5814	1-216-295-91	SHORT CHIP 0	
D6200	8-719-063-70	DIODE D1NL20U	
D7004	8-719-929-15	DIODE HZS9.1NB2	
D7006	1-216-809-11	RES-CHIP 100 5% 1/10W	
		< FERRITE BEAD >	
FB3001	1-414-760-21	FERRITE 0UH	
		< FILTER >	
FL2000	1-239-803-11	FILTER, EMI	
		< IC >	
IC2000	6-701-031-01	IC MSP3411G-QA-B10	
IC2001	8-759-100-96	IC UPC4558G2	
IC2500	8-759-831-56	IC TDA7497	
IC3200	6-702-458-01	IC VSP9407B-B11-GEG	
IC5102	8-759-325-48	IC CA0005AD	
IC5103	8-752-072-94	IC CXA1875AM-T4	
IC5104	8-759-803-42	IC LA6500-FA	
IC5300	8-759-008-70	IC LM358N	
IC5301	8-759-659-67	IC LA6393DLL	
IC5302	8-759-659-67	IC LA6393DLL	
IC5400	8-759-696-71	IC STV9379A	
IC6200	8-759-648-19	IC L7809CV/LSY	
IC6201	8-759-648-20	IC L7805CV/LSY	
IC6202	8-759-445-59	IC BA033T	
IC6203	8-759-098-24	IC PQ30RV11	
IC6204	8-759-591-02	IC L78L33ABZ-AP	
IC6205	8-759-394-35	IC BA12T	
IC6206	8-759-991-41	IC LM78L05ACZ	
IC7002	8-752-090-88	IC CXA2100AQ-TL	
		< SOCKET >	
J2000	1-784-632-11	JACK, PIN 2P	
		< JUMPER RESISTOR >	
JR104	1-216-295-91	SHORT CHIP 0	
JR106	1-216-295-91	SHORT CHIP 0	
JR107	1-216-295-91	SHORT CHIP 0	
JR110	1-216-295-91	SHORT CHIP 0	
JR113	1-216-295-91	SHORT CHIP 0	
JR115	1-216-295-91	SHORT CHIP 0	
JR117	1-216-295-91	SHORT CHIP 0	
JR118	1-216-295-91	SHORT CHIP 0	
JR121	1-216-864-11	SHORT CHIP 0	
JR123	1-216-864-11	SHORT CHIP 0	
JR150	1-216-295-91	SHORT CHIP 0	
JR515	1-216-295-91	SHORT CHIP 0	
JR516	1-216-295-91	SHORT CHIP 0	

Note : The components identified by shading and marked ⚠ are critical for safety. Replace only with the part numbers specified in the parts list.

A

REF.NO.	PART.NO	DESCRIPTION	REMARK
JR523	1-216-295-91	SHORT CHIP 0	
JR2000	1-216-295-91	SHORT CHIP 0	
		< COIL >	
L1000	1-412-987-31	INDUCTOR 4.7UH	
L1001	1-412-987-31	INDUCTOR 4.7UH	
L1002	1-414-934-21	INDUCTOR 10UH	
L1003	1-414-934-21	INDUCTOR 10UH	
L1005	1-414-934-21	INDUCTOR 10UH	
L2000	1-414-934-21	INDUCTOR 10UH	
L2001	1-414-934-21	INDUCTOR 10UH	
L2008	1-216-295-91	SHORT CHIP 0	
L2009	1-216-295-91	SHORT CHIP 0	
L2010	1-414-928-21	INDUCTOR 1UH	
L2012	1-414-934-21	INDUCTOR 10UH	
L2014	1-408-602-31	INDUCTOR 8.2UH	
L3000	1-216-295-91	SHORT CHIP 0	
L3004	1-216-295-91	SHORT CHIP 0	
L3005	1-216-295-91	SHORT CHIP 0	
L3006	1-216-295-91	SHORT CHIP 0	
L3007	1-216-295-91	SHORT CHIP 0	
L3008	1-216-295-91	SHORT CHIP 0	
L3009	1-216-295-91	SHORT CHIP 0	
L3010	1-216-295-91	SHORT CHIP 0	
L3011	1-216-295-91	SHORT CHIP 0	
L3012	1-216-295-91	SHORT CHIP 0	
L3200	1-412-006-31	INDUCTOR 10UH	
L3202	1-412-006-31	INDUCTOR 10UH	
L3203	1-412-006-31	INDUCTOR 10UH	
L3206	1-412-006-31	INDUCTOR 10UH	
L3208	1-412-006-31	INDUCTOR 10UH	
L3300	1-412-006-31	INDUCTOR 10UH	
L5300	1-406-989-21	INDUCTOR 10MH	
L5301	1-406-989-21	INDUCTOR 10MH	
L5400	1-412-524-11	INDUCTOR 8.2UH	
L5896	1-216-864-11	SHORT CHIP 0	
L5897	1-216-864-11	SHORT CHIP 0	
L5898	1-414-934-21	INDUCTOR 10UH	
L5899	1-414-934-21	INDUCTOR 10UH	
L7001	1-414-934-21	INDUCTOR 10UH	
L7009	1-414-934-21	INDUCTOR 10UH	
L7010	1-414-934-21	INDUCTOR 10UH	
L7011	1-414-934-21	INDUCTOR 10UH	
L7012	1-414-934-21	INDUCTOR 10UH	
		< PROTECTOR MODULE >	
PS2501 ⚠	1-533-597-31	LINK, IC	

REF.NO.	PART.NO	DESCRIPTION	REMARK
		< TRANSISTOR >	
Q1000	8-729-010-05	TRANSISTOR MSB709-RT1	
Q1001	8-729-010-29	TRANSISTOR MSD601-RST1	
Q1004	8-729-010-05	TRANSISTOR MSB709-RT1	
Q1005	8-729-421-19	TRANSISTOR UN2213	
Q1006	8-729-010-05	TRANSISTOR MSB709-RT1	
Q2000	8-729-010-29	TRANSISTOR MSD601-RST1	
Q2001	8-729-010-29	TRANSISTOR MSD601-RST1	
Q2002	8-729-010-29	TRANSISTOR MSD601-RST1	
Q2003	8-729-010-29	TRANSISTOR MSD601-RST1	
Q2004	8-729-010-29	TRANSISTOR MSD601-RST1	
Q2005	8-729-010-29	TRANSISTOR MSD601-RST1	
Q2501	8-729-010-29	TRANSISTOR MSD601-RST1	
Q2502	8-729-010-29	TRANSISTOR MSD601-RST1	
Q2503	8-729-010-29	TRANSISTOR MSD601-RST1	
Q2504	8-729-010-05	TRANSISTOR MSB709-RT1	
Q3200	8-729-010-29	TRANSISTOR MSD601-RST1	
Q3201	8-729-010-29	TRANSISTOR MSD601-RST1	
Q3202	8-729-010-05	TRANSISTOR MSB709-RT1	
Q3204	8-729-010-05	TRANSISTOR MSB709-RT1	
Q3300	8-729-010-05	TRANSISTOR MSB709-RT1	
Q3301	8-729-010-05	TRANSISTOR MSB709-RT1	
Q3302	8-729-010-05	TRANSISTOR MSB709-RT1	
Q3500	8-729-028-28	TRANSISTOR 2SK2036(TE85L)	
Q3501	8-729-028-28	TRANSISTOR 2SK2036(TE85L)	
Q5100	8-729-010-05	TRANSISTOR MSB709-RT1	
Q5101	8-729-010-29	TRANSISTOR MSD601-RST1	
Q5300	8-729-010-29	TRANSISTOR MSD601-RST1	
Q5301	8-729-053-33	TRANSISTOR IRF614-037	
Q5302	8-729-140-97	TRANSISTOR 2SB734-34	
Q5303	8-729-010-29	TRANSISTOR MSD601-RST1	
Q5304	8-729-010-29	TRANSISTOR MSD601-RST1	
Q5305	8-729-119-78	TRANSISTOR 2SC2785-HFE	
Q5306	8-729-140-97	TRANSISTOR 2SB734-34	
Q5307	8-729-010-05	TRANSISTOR MSB709-RT1	
Q5400	8-729-010-29	TRANSISTOR MSD601-RST1	
Q5401	8-729-421-19	TRANSISTOR UN2213	
Q5402	8-729-010-05	TRANSISTOR MSB709-RT1	
Q5403	8-729-421-19	TRANSISTOR UN2213	
Q5404	8-729-926-76	TRANSISTOR IRF620	
Q5813	8-729-421-19	TRANSISTOR UN2213	
Q5814	8-729-010-05	TRANSISTOR MSB709-RT1	
Q5815	8-729-010-29	TRANSISTOR MSD601-RST1	
Q5816	8-729-010-05	TRANSISTOR MSB709-RT1	
Q6201	8-729-140-97	TRANSISTOR 2SB734-34	
Q7003	8-729-010-29	TRANSISTOR MSD601-RST1	
Q7009	8-729-010-05	TRANSISTOR MSB709-RT1	
Q7011	8-729-010-05	TRANSISTOR MSB709-RT1	
Q7012	8-729-010-05	TRANSISTOR MSB709-RT1	

REF.NO.	PART.NO	DESCRIPTION			REMARK
Q7013	8-729-010-29	TRANSISTOR MSD601-RST1			
Q7014	8-729-010-05	TRANSISTOR MSB709-RT1			
Q7015	8-729-010-05	TRANSISTOR MSB709-RT1			
Q7016	8-729-010-29	TRANSISTOR MSD601-RST1			
Q7017	8-729-010-05	TRANSISTOR MSB709-RT1			
Q7018	8-729-010-05	TRANSISTOR MSB709-RT1			
Q7019	8-729-010-29	TRANSISTOR MSD601-RST1			
		< RESISTOR >			
R0101	1-216-833-11	RES-CHIP	10K	5%	1/10W
R0102	1-216-827-11	RES-CHIP	3.3K	5%	1/10W
R0103	1-216-073-91	RES-CHIP	10K	5%	1/10W
R0104	1-216-827-11	RES-CHIP	3.3K	5%	1/10W
R0105	1-216-025-11	RES-CHIP	100	5%	1/10W
R0107	1-216-025-11	RES-CHIP	100	5%	1/10W
R1000	1-216-049-11	RES-CHIP	1K	5%	1/10W
R1001	1-216-001-00	RES-CHIP	10	5%	1/10W
R1002	1-216-821-11	RES-CHIP	1K	5%	1/10W
R1003	1-216-809-11	RES-CHIP	100	5%	1/10W
R1004	1-216-809-11	RES-CHIP	100	5%	1/10W
R1005	1-216-049-11	RES-CHIP	1K	5%	1/10W
R1006	1-216-051-00	RES-CHIP	1.2K	5%	1/10W
R1007	1-414-813-11	FERRITE	0UH		
R1008	1-216-295-91	SHORT CHIP	0		
R1009	1-216-295-91	SHORT CHIP	0		
R1010	1-216-295-91	SHORT CHIP	0		
R1014	1-216-295-91	SHORT CHIP	0		
R1017	1-216-822-11	RES-CHIP	1.2K	5%	1/10W
R1019	1-216-295-91	SHORT CHIP	0		
R1021	1-216-833-11	RES-CHIP	10K	5%	1/10W
R1022	1-216-839-11	RES-CHIP	33K	5%	1/10W
R1023	1-216-849-11	RES-CHIP	220K	5%	1/10W
R1024	1-216-839-11	RES-CHIP	33K	5%	1/10W
R1025	1-216-837-11	RES-CHIP	22K	5%	1/10W
R1026	1-216-817-11	RES-CHIP	470	5%	1/10W
R2009	1-216-817-11	RES-CHIP	470	5%	1/10W
R2010	1-216-817-11	RES-CHIP	470	5%	1/10W
R2011	1-216-049-11	RES-CHIP	1K	5%	1/10W
R2014	1-216-049-11	RES-CHIP	1K	5%	1/10W
R2015	1-216-295-91	SHORT CHIP	0		
R2017	1-216-853-11	RES-CHIP	470K	5%	1/10W
R2018	1-216-295-91	SHORT CHIP	0		
R2020	1-216-853-11	RES-CHIP	470K	5%	1/10W
R2023	1-216-853-11	RES-CHIP	470K	5%	1/10W
R2026	1-216-853-11	RES-CHIP	470K	5%	1/10W
R2029	1-216-853-11	RES-CHIP	470K	5%	1/10W
R2032	1-216-853-11	RES-CHIP	470K	5%	1/10W
R2035	1-216-853-11	RES-CHIP	470K	5%	1/10W
R2038	1-216-853-11	RES-CHIP	470K	5%	1/10W

REF.NO.	PART.NO	DESCRIPTION			REMARK
R2041	1-216-853-11	RES-CHIP	470K	5%	1/10W
R2042	1-216-829-11	RES-CHIP	4.7K	5%	1/10W
R2043	1-216-829-11	RES-CHIP	4.7K	5%	1/10W
R2044	1-216-853-11	RES-CHIP	470K	5%	1/10W
R2047	1-216-853-11	RES-CHIP	470K	5%	1/10W
R2048	1-216-837-11	RES-CHIP	22K	5%	1/10W
R2050	1-216-845-11	RES-CHIP	100K	5%	1/10W
R2051	1-216-049-11	RES-CHIP	1K	5%	1/10W
R2052	1-216-837-11	RES-CHIP	22K	5%	1/10W
R2053	1-216-864-11	SHORT CHIP	0		
R2054	1-216-049-11	RES-CHIP	1K	5%	1/10W
R2055	1-216-049-11	RES-CHIP	1K	5%	1/10W
R2056	1-216-037-00	RES-CHIP	330	5%	1/10W
R2057	1-216-025-11	RES-CHIP	100	5%	1/10W
R2058	1-216-025-11	RES-CHIP	100	5%	1/10W
R2059	1-216-829-11	RES-CHIP	4.7K	5%	1/10W
R2060	1-216-829-11	RES-CHIP	4.7K	5%	1/10W
R2061	1-216-829-11	RES-CHIP	4.7K	5%	1/10W
R2062	1-216-829-11	RES-CHIP	4.7K	5%	1/10W
R2063	1-216-829-11	RES-CHIP	4.7K	5%	1/10W
R2064	1-249-425-11	CARBON	4.7K	5%	1/4W
R2065	1-216-837-11	RES-CHIP	22K	5%	1/10W
R2066	1-216-829-11	RES-CHIP	4.7K	5%	1/10W
R2067	1-216-829-11	RES-CHIP	4.7K	5%	1/10W
R2068	1-216-049-11	RES-CHIP	1K	5%	1/10W
R2069	1-216-837-11	RES-CHIP	22K	5%	1/10W
R2070	1-216-833-11	RES-CHIP	10K	5%	1/10W
R2071	1-216-839-11	RES-CHIP	33K	5%	1/10W
R2072	1-216-049-11	RES-CHIP	1K	5%	1/10W
R2073	1-216-049-11	RES-CHIP	1K	5%	1/10W
R2074	1-216-837-11	RES-CHIP	22K	5%	1/10W
R2075	1-216-833-11	RES-CHIP	10K	5%	1/10W
R2076	1-216-839-11	RES-CHIP	33K	5%	1/10W
R2077	1-216-049-11	RES-CHIP	1K	5%	1/10W
R2078	1-216-025-11	RES-CHIP	100	5%	1/10W
R2079	1-216-049-11	RES-CHIP	1K	5%	1/10W
R2080	1-218-867-11	METAL CHIP	6.8K	0.5%	1/10W
R2081	1-216-833-11	RES-CHIP	10K	5%	1/10W
R2082	1-216-805-11	RES-CHIP	47	5%	1/10W
R2083	1-216-817-11	RES-CHIP	470	5%	1/10W
R2084	1-216-837-11	RES-CHIP	22K	5%	1/10W
R2085	1-216-837-11	RES-CHIP	22K	5%	1/10W
R2086	1-216-837-11	RES-CHIP	22K	5%	1/10W
R2087	1-216-837-11	RES-CHIP	22K	5%	1/10W
R2088	1-216-041-00	RES-CHIP	470	5%	1/10W
R2089	1-216-041-00	RES-CHIP	470	5%	1/10W
R2092	1-216-039-00	RES-CHIP	390	5%	1/10W
R2093	1-216-039-00	RES-CHIP	390	5%	1/10W
R2094	1-216-039-00	RES-CHIP	390	5%	1/10W
R2095	1-216-039-00	RES-CHIP	390	5%	1/10W

REF.NO.	PART.NO	DESCRIPTION			REMARK
R2096	1-216-039-00	RES-CHIP	390	5%	1/10W
R2097	1-216-039-00	RES-CHIP	390	5%	1/10W
R2098	1-216-049-11	RES-CHIP	1K	5%	1/10W
R2099	1-216-049-11	RES-CHIP	1K	5%	1/10W
R2500	1-216-073-91	RES-CHIP	10K	5%	1/10W
R2501	1-216-341-11	METAL OXIDE	0.22	5%	1W
R2502	1-208-810-11	METAL CHIP	15K	0.5%	1/10W
R2503	1-208-810-11	METAL CHIP	15K	0.5%	1/10W
R2504	1-216-049-11	RES-CHIP	1K	5%	1/10W
R2507	1-216-837-11	RES-CHIP	22K	5%	1/10W
R2509	1-249-417-11	CARBON	1K	5%	1/4W
R2511	1-216-073-91	RES-CHIP	10K	5%	1/10W
R2516	1-216-081-00	RES-CHIP	22K	5%	1/10W
R2517	1-216-841-11	RES-CHIP	47K	5%	1/10W
R2518	1-216-049-11	RES-CHIP	1K	5%	1/10W
R2519	1-216-833-11	RES-CHIP	10K	5%	1/10W
R2520	1-216-025-11	RES-CHIP	100	5%	1/10W
R2524	1-216-833-11	RES-CHIP	10K	5%	1/10W
R2525	1-216-828-11	RES-CHIP	3.9K	5%	1/10W
R2912	1-216-295-91	SHORT CHIP	0		
R2914	1-216-853-11	RES-CHIP	470K	5%	1/10W
R2921	1-216-295-91	SHORT CHIP	0		
R2924	1-216-295-91	SHORT CHIP	0		
R2927	1-216-295-91	SHORT CHIP	0		
R2930	1-216-295-91	SHORT CHIP	0		
R2933	1-216-295-91	SHORT CHIP	0		
R2936	1-216-295-91	SHORT CHIP	0		
R2939	1-216-295-91	SHORT CHIP	0		
R2942	1-216-295-91	SHORT CHIP	0		
R2945	1-216-295-91	SHORT CHIP	0		
R3000	1-216-025-11	RES-CHIP	100	5%	1/10W
R3001	1-216-022-00	RES-CHIP	75	5%	1/10W
R3009	1-216-025-11	RES-CHIP	100	5%	1/10W
R3010	1-216-022-00	RES-CHIP	75	5%	1/10W
R3011	1-216-025-11	RES-CHIP	100	5%	1/10W
R3012	1-216-022-00	RES-CHIP	75	5%	1/10W
R3013	1-216-025-11	RES-CHIP	100	5%	1/10W
R3014	1-216-022-00	RES-CHIP	75	5%	1/10W
R3015	1-216-022-00	RES-CHIP	75	5%	1/10W
R3016	1-216-025-11	RES-CHIP	100	5%	1/10W
R3017	1-216-022-00	RES-CHIP	75	5%	1/10W
R3018	1-216-025-11	RES-CHIP	100	5%	1/10W
R3019	1-216-022-00	RES-CHIP	75	5%	1/10W
R3020	1-216-025-11	RES-CHIP	100	5%	1/10W
R3021	1-216-022-00	RES-CHIP	75	5%	1/10W
R3022	1-216-025-11	RES-CHIP	100	5%	1/10W
R3023	1-216-022-00	RES-CHIP	75	5%	1/10W
R3024	1-216-025-11	RES-CHIP	100	5%	1/10W
R3025	1-216-022-00	RES-CHIP	75	5%	1/10W
R3026	1-216-022-00	RES-CHIP	75	5%	1/10W
R3027	1-216-025-11	RES-CHIP	100	5%	1/10W
R3028	1-216-022-00	RES-CHIP	75	5%	1/10W
R3029	1-216-045-00	RES-CHIP	680	5%	1/10W
R3030	1-216-022-00	RES-CHIP	75	5%	1/10W
R3031	1-216-022-00	RES-CHIP	75	5%	1/10W
R3032	1-216-022-00	RES-CHIP	75	5%	1/10W
R3033	1-216-025-11	RES-CHIP	100	5%	1/10W
R3034	1-216-022-00	RES-CHIP	75	5%	1/10W
R3035	1-216-025-11	RES-CHIP	100	5%	1/10W
R3036	1-216-022-00	RES-CHIP	75	5%	1/10W
R3037	1-216-045-00	RES-CHIP	680	5%	1/10W
R3218	1-216-821-11	RES-CHIP	1K	5%	1/10W
R3219	1-216-821-11	RES-CHIP	1K	5%	1/10W
R3220	1-216-837-11	RES-CHIP	22K	5%	1/10W
R3221	1-216-837-11	RES-CHIP	22K	5%	1/10W
R3222	1-216-837-11	RES-CHIP	22K	5%	1/10W
R3223	1-216-837-11	RES-CHIP	22K	5%	1/10W
R3225	1-216-025-11	RES-CHIP	100	5%	1/10W
R3226	1-216-025-11	RES-CHIP	100	5%	1/10W
R3229	1-216-025-11	RES-CHIP	100	5%	1/10W
R3233	1-216-821-11	RES-CHIP	1K	5%	1/10W
R3234	1-216-821-11	RES-CHIP	1K	5%	1/10W
R3235	1-216-822-11	RES-CHIP	1.2K	5%	1/10W
R3236	1-216-822-11	RES-CHIP	1.2K	5%	1/10W
R3237	1-216-797-11	RES-CHIP	10	5%	1/10W
R3238	1-216-797-11	RES-CHIP	10	5%	1/10W
R3305	1-216-025-11	RES-CHIP	100	5%	1/10W
R3306	1-216-025-11	RES-CHIP	100	5%	1/10W
R3312	1-216-825-11	RES-CHIP	2.2K	5%	1/10W
R3313	1-216-825-11	RES-CHIP	2.2K	5%	1/10W
R3314	1-216-825-11	RES-CHIP	2.2K	5%	1/10W
R3318	1-216-025-11	RES-CHIP	100	5%	1/10W
R3319	1-216-025-11	RES-CHIP	100	5%	1/10W
R3320	1-216-025-11	RES-CHIP	100	5%	1/10W
R3403	1-216-821-11	RES-CHIP	1K	5%	1/10W
R3500	1-216-834-11	RES-CHIP	12K	5%	1/10W
R3501	1-216-834-11	RES-CHIP	12K	5%	1/10W
R3504	1-216-825-11	RES-CHIP	2.2K	5%	1/10W
R3505	1-216-825-11	RES-CHIP	2.2K	5%	1/10W
R3603	1-216-295-91	SHORT CHIP	0		
R5102	1-208-814-91	METAL CHIP	22K	0.5%	1/10W
R5103	1-216-637-11	METAL CHIP	270	0.5%	1/10W
R5107	1-208-814-91	METAL CHIP	22K	0.5%	1/10W
R5111	1-208-814-91	METAL CHIP	22K	0.5%	1/10W
R5112	1-216-679-11	METAL CHIP	15K	0.5%	1/10W
R5118	1-249-411-11	CARBON	330	5%	1/4W
R5119	1-216-844-11	RES-CHIP	82K	5%	1/10W
R5122	1-216-821-11	RES-CHIP	1K	5%	1/10W
R5125	1-216-836-11	RES-CHIP	18K	5%	1/10W
R5126	1-249-406-11	CARBON	120	5%	1/4W

REF.NO.	PART.NO	DESCRIPTION			REMARK
R5127	1-216-025-11	RES-CHIP	100	5%	1/10W
R5128	1-216-809-11	RES-CHIP	100	5%	1/10W
R5129	1-216-809-11	RES-CHIP	100	5%	1/10W
R5130	1-216-809-11	RES-CHIP	100	5%	1/10W
R5131	1-216-821-11	RES-CHIP	1K	5%	1/10W
R5132	1-216-809-11	RES-CHIP	100	5%	1/10W
R5133	1-216-809-11	RES-CHIP	100	5%	1/10W
R5137	1-216-809-11	RES-CHIP	100	5%	1/10W
R5138	1-216-809-11	RES-CHIP	100	5%	1/10W
R5139	1-216-821-11	RES-CHIP	1K	5%	1/10W
R5140	1-216-821-11	RES-CHIP	1K	5%	1/10W
R5146	1-216-025-11	RES-CHIP	100	5%	1/10W
R5148	1-216-809-11	RES-CHIP	100	5%	1/10W
R5149	1-216-637-11	METAL CHIP	270	0.5%	1/10W
R5150	1-249-414-11	CARBON	560	5%	1/4W
R5151	1-249-454-11	CARBON	3.9	5%	1/4W
R5152	1-249-413-11	CARBON	470	5%	1/4W
R5153	1-249-393-11	CARBON	10	5%	1/4W
R5154	1-216-833-11	RES-CHIP	10K	5%	1/10W
R5155	1-249-421-11	CARBON	2.2K	5%	1/4W
R5156	1-216-833-11	RES-CHIP	10K	5%	1/10W
R5157	1-216-829-11	RES-CHIP	4.7K	5%	1/10W
R5300	1-208-806-11	METAL CHIP	10K	0.5%	1/10W
R5301	1-216-829-11	RES-CHIP	4.7K	5%	1/10W
R5302	1-208-806-11	METAL CHIP	10K	0.5%	1/10W
R5303	1-216-685-11	METAL CHIP	27K	0.5%	1/10W
R5304	1-208-806-11	METAL CHIP	10K	0.5%	1/10W
R5305	1-208-852-11	METAL CHIP	820K	0.5%	1/10W
R5306	1-208-802-11	METAL CHIP	6.8K	0.5%	1/10W
R5307	1-216-041-00	RES-CHIP	470	5%	1/10W
R5308	1-216-295-91	SHORT CHIP	0		
R5309	1-208-824-11	METAL CHIP	56K	0.5%	1/10W
R5310	1-208-830-11	METAL CHIP	100K	0.5%	1/10W
R5311	1-216-045-00	RES-CHIP	680	5%	1/10W
R5312	1-208-832-11	METAL CHIP	120K	0.5%	1/10W
R5314	1-208-840-11	METAL CHIP	270K	0.5%	1/10W
R5315	1-216-043-91	RES-CHIP	560	5%	1/10W
R5316	1-216-057-00	RES-CHIP	2.2K	5%	1/10W
R5317	1-216-845-11	RES-CHIP	100K	5%	1/10W
R5318	1-208-806-11	METAL CHIP	10K	0.5%	1/10W
R5319	1-208-840-11	METAL CHIP	270K	0.5%	1/10W
R5320	1-216-833-11	RES-CHIP	10K	5%	1/10W
R5321	1-216-837-11	RES-CHIP	22K	5%	1/10W
R5322	1-216-820-11	RES-CHIP	820	5%	1/10W
R5324	1-208-810-11	METAL CHIP	15K	0.5%	1/10W
R5325	1-208-812-11	METAL CHIP	18K	0.5%	1/10W
R5326	1-216-845-11	RES-CHIP	100K	5%	1/10W
R5327	1-216-472-00	METAL OXIDE	39	5%	3W
R5328	1-216-033-00	RES-CHIP	220	5%	1/10W
R5331	1-216-033-00	RES-CHIP	220	5%	1/10W

REF.NO.	PART.NO	DESCRIPTION			REMARK
R5332	1-208-806-11	METAL CHIP	10K	0.5%	1/10W
R5333	1-208-820-11	METAL CHIP	39K	0.5%	1/10W
R5334	1-208-834-11	METAL CHIP	150K	0.5%	1/10W
R5335	1-208-818-11	METAL CHIP	33K	0.5%	1/10W
R5336	1-216-057-00	RES-CHIP	2.2K	5%	1/10W
R5337	1-218-867-11	METAL CHIP	6.8K	0.5%	1/10W
R5338	1-249-413-11	CARBON	470	5%	1/4W
R5340	1-216-049-11	RES-CHIP	1K	5%	1/10W
R5341	1-216-089-91	RES-CHIP	47K	5%	1/10W
R5342	1-208-818-11	METAL CHIP	33K	0.5%	1/10W
R5343	1-208-808-11	METAL CHIP	12K	0.5%	1/10W
R5344	1-208-820-11	METAL CHIP	39K	0.5%	1/10W
R5345	1-208-832-11	METAL CHIP	120K	0.5%	1/10W
R5346	1-216-849-11	RES-CHIP	220K	5%	1/10W
R5347	1-216-833-11	RES-CHIP	10K	5%	1/10W
R5349	1-216-043-91	RES-CHIP	560	5%	1/10W
R5350	1-216-041-00	RES-CHIP	470	5%	1/10W
R5351	1-216-809-11	RES-CHIP	100	5%	1/10W
R5352	1-216-821-11	RES-CHIP	1K	5%	1/10W
R5400	1-216-849-11	RES-CHIP	220K	5%	1/10W
R5401	1-216-837-11	RES-CHIP	22K	5%	1/10W
R5402	1-216-081-00	RES-CHIP	22K	5%	1/10W
R5403	1-216-829-11	RES-CHIP	4.7K	5%	1/10W
R5404	1-216-829-11	RES-CHIP	4.7K	5%	1/10W
R5405	1-216-829-11	RES-CHIP	4.7K	5%	1/10W
R5407	1-216-857-11	RES-CHIP	1M	5%	1/10W
R5408	1-216-825-11	RES-CHIP	2.2K	5%	1/10W
R5409	1-208-802-11	METAL CHIP	6.8K	0.5%	1/10W
R5410	1-208-798-11	METAL CHIP	4.7K	0.5%	1/10W
R5411	1-216-061-91	RES-CHIP	3.3K	5%	1/10W
R5413	1-208-802-11	METAL CHIP	6.8K	0.5%	1/10W
R5414	1-249-383-11	CARBON	1.5	5%	1/4W
R5415	1-249-389-11	CARBON	4.7	5%	1/4W
R5416	1-215-888-00	METAL OXIDE	220	5%	2W
R5417	1-208-798-11	METAL CHIP	4.7K	0.5%	1/10W
R5420	1-214-798-21	METAL	1.8	1%	1/2W
R5421	1-214-798-21	METAL	1.8	1%	1/2W
R5803	1-216-861-11	RES-CHIP	2.2M	5%	1/10W
R5804	1-216-049-11	RES-CHIP	1K	5%	1/10W
R5805	1-216-049-11	RES-CHIP	1K	5%	1/10W
R5806	1-216-089-91	RES-CHIP	47K	5%	1/10W
R5807	1-216-049-11	RES-CHIP	1K	5%	1/10W
R5808	1-216-049-11	RES-CHIP	1K	5%	1/10W
R5809	1-216-073-91	RES-CHIP	10K	5%	1/10W
R5865	1-216-841-11	RES-CHIP	47K	5%	1/10W
R5869	1-216-817-11	RES-CHIP	470	5%	1/10W
R5871	1-216-850-11	RES-CHIP	270K	5%	1/10W
R5872	1-216-073-91	RES-CHIP	10K	5%	1/10W
R5873	1-216-073-91	RES-CHIP	10K	5%	1/10W
R5875	1-216-825-11	RES-CHIP	2.2K	5%	1/10W

REF.NO.	PART.NO	DESCRIPTION			REMARK
R5877	1-216-821-11	RES-CHIP	1K	5%	1/10W
R5878	1-216-049-11	RES-CHIP	1K	5%	1/10W
R5879	1-216-809-11	RES-CHIP	100	5%	1/10W
R5880	1-216-809-11	RES-CHIP	100	5%	1/10W
R5881	1-216-833-11	RES-CHIP	10K	5%	1/10W
R5882	1-216-833-11	RES-CHIP	10K	5%	1/10W
R5883	1-216-855-11	RES-CHIP	680K	5%	1/10W
R5884	1-216-841-11	RES-CHIP	47K	5%	1/10W
R5885	1-216-809-11	RES-CHIP	100	5%	1/10W
R5887	1-216-809-11	RES-CHIP	100	5%	1/10W
R5888	1-216-809-11	RES-CHIP	100	5%	1/10W
R5889	1-208-806-11	METAL CHIP	10K	0.5%	1/10W
R5892	1-216-833-11	RES-CHIP	10K	5%	1/10W
R5895	1-216-833-11	RES-CHIP	10K	5%	1/10W
R5898	1-216-832-11	RES-CHIP	8.2K	5%	1/10W
R5899	1-216-863-11	RES-CHIP	3.3M	5%	1/10W
R6200	1-216-635-11	METAL CHIP	220	0.5%	1/10W
R6201	1-216-643-11	METAL CHIP	470	0.5%	1/10W
R6202	1-249-395-11	CARBON	15	5%	1/4W
R7007	1-216-049-11	RES-CHIP	1K	5%	1/10W
R7018	1-216-025-11	RES-CHIP	100	5%	1/10W
R7023	1-216-834-11	RES-CHIP	12K	5%	1/10W
R7034	1-216-025-11	RES-CHIP	100	5%	1/10W
R7035	1-216-025-11	RES-CHIP	100	5%	1/10W
R7048	1-216-025-11	RES-CHIP	100	5%	1/10W
R7050	1-216-833-11	RES-CHIP	10K	5%	1/10W
R7051	1-216-025-11	RES-CHIP	100	5%	1/10W
R7052	1-216-025-11	RES-CHIP	100	5%	1/10W
R7053	1-216-049-11	RES-CHIP	1K	5%	1/10W
R7054	1-216-847-11	RES-CHIP	150K	5%	1/10W
R7056	1-218-867-11	METAL CHIP	6.8K	0.5%	1/10W
R7057	1-216-842-11	RES-CHIP	56K	5%	1/10W
R7058	1-216-049-11	RES-CHIP	1K	5%	1/10W
R7065	1-216-821-11	RES-CHIP	1K	5%	1/10W
R7066	1-216-809-11	RES-CHIP	100	5%	1/10W
R7068	1-216-681-11	METAL CHIP	18K	0.5%	1/10W
R7070	1-216-817-11	RES-CHIP	470	5%	1/10W
R7071	1-216-817-11	RES-CHIP	470	5%	1/10W
R7072	1-216-817-11	RES-CHIP	470	5%	1/10W
R7073	1-216-041-00	RES-CHIP	470	5%	1/10W
R7074	1-216-043-91	RES-CHIP	560	5%	1/10W
R7075	1-216-817-11	RES-CHIP	470	5%	1/10W
R7076	1-216-041-00	RES-CHIP	470	5%	1/10W
R7077	1-216-043-91	RES-CHIP	560	5%	1/10W
R7078	1-216-817-11	RES-CHIP	470	5%	1/10W
R7079	1-216-041-00	RES-CHIP	470	5%	1/10W
R7080	1-216-043-91	RES-CHIP	560	5%	1/10W
R7081	1-216-817-11	RES-CHIP	470	5%	1/10W
R7082	1-208-782-11	METAL CHIP	1K	0.5%	1/10W
R7088	1-208-783-11	METAL CHIP	1.1K	0.5%	1/10W
R7089	1-216-819-11	RES-CHIP	680	5%	1/10W
R7090	1-216-819-11	RES-CHIP	680	5%	1/10W
R7091	1-216-819-11	RES-CHIP	680	5%	1/10W
R7092	1-216-295-91	SHORT CHIP	0		
R7093	1-216-295-91	SHORT CHIP	0		
R7094	1-216-295-91	SHORT CHIP	0		
R7095	1-216-295-91	SHORT CHIP	0		
R7096	1-216-803-11	RES-CHIP	33	5%	1/10W
R7097	1-216-803-11	RES-CHIP	33	5%	1/10W
R7098	1-216-803-11	RES-CHIP	33	5%	1/10W
		< TUNER >			
TU1000	8-598-535-12	FRONTEND BTF-EF411			
		< CRYSTAL >			
X2000	1-760-628-11	VIBRATOR, CRYSTAL			
X3200	1-781-946-21	VIBRATOR, CRYSTAL			
X5800	1-767-127-11	VIBRATOR, CERAMIC			

* A-1300-627-A COMPLETE PC BOARD, VM

	4-382-854-01	SCREW (M3X8), P, SW (+)		
		< CAPACITOR >		
C7401	1-126-935-11	ELECT	470UF	20.00% 16V
C7403	1-126-935-11	ELECT	470UF	20.00% 16V
C7404	1-115-339-11	CERAMIC CHIP	0.1UF	10.00% 50V
C7405	1-126-933-11	ELECT	100UF	20.00% 16V
C7406	1-126-935-11	ELECT	470UF	20.00% 16V
C7407	1-107-364-11	MYLAR	0.01UF	10.00% 200V
C7408	1-107-364-11	MYLAR	0.01UF	10.00% 200V
C7409	1-107-649-11	ELECT	2.2UF	20.00% 250V
C7410	1-130-471-00	MYLAR	0.001UF	5.00% 50V
C7411	1-130-471-00	MYLAR	0.001UF	5.00% 50V
C7412	1-126-935-11	ELECT	470UF	20.00% 16V
C7413	1-126-935-11	ELECT	470UF	20.00% 16V
C7414	1-107-652-11	ELECT	10UF	20.00% 250V
C7415	1-107-363-91	MYLAR	0.0068UF	10.00% 200V
C7418	1-163-021-91	CERAMIC CHIP	0.01UF	10.00% 50V
C7421	1-163-251-11	CERAMIC CHIP	100PF	5.00% 50V
		< CONNECTOR >		
CN7442	* 1-564-508-11	PLUG, CONNECTOR 5P		
CN7443	* 1-564-506-11	PLUG, CONNECTOR 3P		
CN7444	* 1-770-723-11	CONNECTOR, BOARD TO BOARD 8P		
		< DIODE >		
D7400	8-719-991-33	DIODE 1SS133T-77		
D7401	8-719-991-33	DIODE 1SS133T-77		
D7403	8-719-991-33	DIODE 1SS133T-77		

Note : The components identified by shading and marked ⚠ are critical for safety. Replace only with the part numbers specified in the parts list.

REF.NO.	PART.NO	DESCRIPTION	REMARK
D7404	8-719-991-33	DIODE 1SS133T-77	
D7405	8-719-924-11	DIODE MTZJ-T-77-22	
D7406	8-719-924-11	DIODE MTZJ-T-77-22	
		< COIL >	
L7400	1-414-934-21	INDUCTOR 10UH	
L7402	1-414-934-21	INDUCTOR 10UH	
L7403	1-414-934-21	INDUCTOR 10UH	
		< TRANSISTOR >	
Q7400	8-729-010-29	TRANSISTOR MSD601-RST1	
Q7401	8-729-010-29	TRANSISTOR MSD601-RST1	
Q7402	8-729-010-29	TRANSISTOR MSD601-RST1	
Q7403	8-729-119-78	TRANSISTOR 2SC2785-HFE	
Q7404	8-729-026-49	TRANSISTOR 2SA1037AK-T146-R	
Q7405	8-729-026-39	TRANSISTOR 2SA933AS-QT	
Q7406	8-729-045-05	TRANSISTOR 2SA2005	
Q7407	8-729-045-04	TRANSISTOR 2SC5511	
Q7408	8-729-026-49	TRANSISTOR 2SA1037AK-T146-R	
Q7409	8-729-010-29	TRANSISTOR MSD601-RST1	
		< RESISTOR >	
R7400	1-216-017-91	RES-CHIP 47 5% 1/10W	
R7401	1-216-061-91	RES-CHIP 3.3K 5% 1/10W	
R7402	1-216-041-00	RES-CHIP 470 5% 1/10W	
R7403	1-249-393-11	CARBON 10 5% 1/4W	
R7404	1-249-413-11	CARBON 470 5% 1/4W	
R7405	1-216-065-91	RES-CHIP 4.7K 5% 1/10W	
R7407	1-249-411-11	CARBON 330 5% 1/4W	
R7409	1-216-029-00	RES-CHIP 150 5% 1/10W	
R7410	1-216-017-91	RES-CHIP 47 5% 1/10W	
R7411	1-216-017-91	RES-CHIP 47 5% 1/10W	
R7412	1-216-017-91	RES-CHIP 47 5% 1/10W	
R7413	1-249-414-11	CARBON 560 5% 1/4W	
R7414	1-249-432-11	CARBON 18K 5% 1/4W	
R7415	1-247-739-11	CARBON 100 5% 1/2W	
R7416	1-249-389-11	CARBON 4.7 5% 1/4W	
R7417	1-249-432-11	CARBON 18K 5% 1/4W	
R7418	1-249-414-11	CARBON 560 5% 1/4W	
R7419	1-249-421-11	CARBON 2.2K 5% 1/4W	
R7420	1-249-421-11	CARBON 2.2K 5% 1/4W	
R7421	1-249-389-11	CARBON 4.7 5% 1/4W	
R7422	1-249-405-11	CARBON 100 5% 1/4W	
R7423	1-215-915-11	METAL OXIDE 470 5% 3W	
R7427	1-216-025-11	RES-CHIP 100 5% 1/10W	
R7428	1-216-033-00	RES-CHIP 220 5% 1/10W	
R7429	1-216-033-00	RES-CHIP 220 5% 1/10W	
R7432	1-216-065-91	RES-CHIP 4.7K 5% 1/10W	
R7433	1-249-395-11	CARBON 15 5% 1/4W	
R7434	1-249-395-11	CARBON 15 5% 1/4W	
R7435	1-216-031-00	RES-CHIP 180 5% 1/10W	
R7436	1-216-049-11	RES-CHIP 1K 5% 1/10W	

* A-1624-102-A MOUNTED PC BOARD, F2

REF.NO.	PART.NO	DESCRIPTION	REMARK
	4-206-220-01	HOLDER, LED	
	* 4-374-846-01	COVER, CAPACITOR, CAP TYPE	
		< CAPACITOR >	
C0982	1-104-665-11	ELECT 100UF 20.00% 25V	
C0983	1-102-114-00	CERAMIC 470PF 10.00% 50V	
C0984	1-102-129-00	CERAMIC 0.01UF 10.00% 50V	
C6981 ⚠	1-113-924-11	CERAMIC 0.0047UF 20.00% 250V	
		< CONNECTOR >	
CN0981	* 1-564-507-11	PLUG, CONNECTOR 4P	
CN6981 ⚠	* 1-580-844-11	PIN, CONNECTOR (POWER)	
CN6982 ⚠	* 1-695-292-11	PIN, CONNECTOR (POWER)	
CN6983 ⚠	1-695-915-11	TAB (CONTACT)	
		< DIODE >	
D0981	8-719-109-89	DIODE RD5.6ESB2	
D0983	8-719-082-12	DIODE TLHK5190	
		< FUSE >	
F6981 ⚠	1-576-232-11	FUSE (H.B.C.) 5A/250V	
⚠	1-533-725-11	HOLDER, FUSE	
		< IC >	
IC0981	8-742-180-30	HYB IC SBX3081-51(30)	
		< RESISTOR >	
R0982	1-247-807-31	CARBON 100 5% 1/4W	
R6981 ⚠	1-202-719-00	SOLID 1M 10% 1/2W	
		< SWITCH >	
S6981 ⚠	1-571-433-21	SWITCH, PUSH (AC POWER)	
		< VARISTOR >	
VD6981 ⚠	1-803-830-11	VARISTOR (ERZV14D621)	

* A-1647-043-A MOUNTED PC BOARD, H2

REF.NO.	PART.NO	DESCRIPTION	REMARK
		< CAPACITOR >	
C2906	1-126-960-11	ELECT 1UF 20.00% 50V	
C2907	1-126-960-11	ELECT 1UF 20.00% 50V	
C2913	1-162-964-11	CERAMIC CHIP 0.001UF 10.00% 50V	
C2914	1-162-964-11	CERAMIC CHIP 0.001UF 10.00% 50V	

Note : The components identified by shading and marked ⚠ are critical for safety. Replace only with the part numbers specified in the parts list.

REF.NO.	PART.NO	DESCRIPTION	REMARK
		< CONNECTOR >	
CN2900	1-779-947-11	TERMINAL BLOCK, S	
CN2906	* 1-564-524-11	PLUG, CONNECTOR 9P	
CN2908	1-564-521-11	PLUG, CONNECTOR 6P	
		< SOCKET >	
J2900	1-750-264-11	JACK	
		< RESISTOR >	
R0901	1-249-427-11	CARBON 6.8K 5% 1/4W	
R0902	1-215-445-00	METAL 10K 1% 1/4W	
R0911	1-249-419-11	CARBON 1.5K 5% 1/4W	
R0913	1-247-843-11	CARBON 3.3K 5% 1/4W	
R0914	1-249-431-11	CARBON 15K 5% 1/4W	
R2903	1-249-406-11	CARBON 120 5% 1/4W	
R2904	1-249-406-11	CARBON 120 5% 1/4W	
R2909	1-247-895-91	CARBON 470K 5% 1/4W	
R2910	1-247-895-91	CARBON 470K 5% 1/4W	
R2915	1-249-406-11	CARBON 120 5% 1/4W	
R2916	1-249-406-11	CARBON 120 5% 1/4W	
R2917	1-249-412-11	CARBON 390 5% 1/4W	
R2918	1-249-412-11	CARBON 390 5% 1/4W	
		< SWITCH >	
S0900	1-692-979-11	SWITCH, TACTILE	
S0901	1-692-979-11	SWITCH, TACTILE	
S0902	1-692-979-11	SWITCH, TACTILE	

REF.NO.	PART.NO	DESCRIPTION	REMARK
MISCELLANEOUS			
⚠	1-571-433-21	SWITCH PUSH (AC POWER)	
⚠	1-792-035-11	CORD, POWER (WITH FILTER)	
	1-424-855-11	COIL, CHOKE 29MMH	
	8-598-535-12	FRONTEND BTF-EF411	
⚠	1-453-441-11	TRANSFORMER ASSY, FLYBACK (NX-4522//Z2N4)	
	1-529-408-11	SPEAKER (4.2x24CM)	
⚠	1-451-480-22	DEFLECTION YOKE (Y32RVC2)	
	1-419-363-11	COIL, NA ROTATION	
	8-453-011-11	NECK ASSY, (NA299-M)	
⚠	1-424-888-11	COIL, DEGAUSSING	
⚠	1-251-946-62	CAP ASSY, HIGH-VOLTAGE	
⚠	8-735-079-05	PICTURE TUBE (W76LLZ060X)	
	1-452-094-00	MAGNET, ROTATABLE DISK; 15MM	
	1-452-032-11	MAGNET, DISK; 10MM	
ACCESSORIES AND PACKAGING MATERIALS			
	*4-029-168-01	BAG, PROTECTION	
	*4-089-363-01	INDIVIDUAL CARTON	
	4-089-036-11	INSTRUCTION MANUAL (ENGLISH)	
REMOTE COMMANDER			
	1-476-700-12	REMOTE COMMANDER (RM-934)	

KV-32LS65AUS
RM-934

Sony Corporation
Sony Technology Malaysia Sdn. Bhd.
Visual Entertainment General Area

English
02EP7100-1
Printed in Malaysia
© 2002.5

9-872-296-01